ITEM NO.:01518

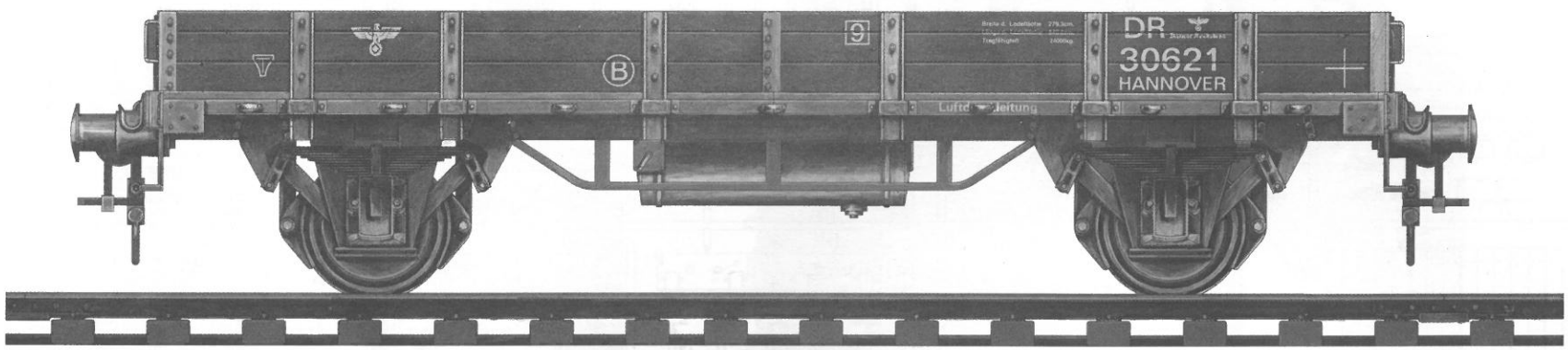

1:35 SCALE

German Railway Gondola(Lower sides)

德国低帮无盖货车

READ BEFORE ASSEMBLY:

- Study and understand these instructions thoroughly before beginning assembly
- When needed, remove photo-etch parts carefully using a modeling knife or photo etch sprue cutter, being careful not to damage or lose small parts.
- Take extra care in handling photo etch parts in order to avoid injury
- Apply instant cement sparingly to photo etch parts where instructed
- Tools recommended(not included in kit):Plastic and instant cements,sprue cutters,long nose pliers,modeling knife, small files, tweezers, pin vise & scissors. Soft cloth and sandpaper will also assist in construction
- Glue and paint are not included in the kit. Use plastic cement and hobby paints only. Color guide for purchasing paint is included in the kit.

装配之前仔细阅读

- 小心用模型锉刀锉平所有零件表面的注射浇口。
- 小心用刀片切下蚀刻片零件，不要遗失小零件。
- 用强力快干胶水粘合蚀刻片零件和金属轴。过量快干胶水使用可能导致可动零件会粘住，小心涂胶。
- 取蚀刻片时应特别注意安全，防止利边划伤手指。
- 某些零件表面需贴上水贴纸，请选择在装配的同时进行。
- 推荐模型工具(自备)：胶水，水口剪刀，长咀钳，刀片，锉刀，镊子，钳，钻，剪刀，瞬间快干胶。
- 软布同砂纸同时也应该是必备工具。
- 请使用塑料胶水和油漆，模型内不含。

水贴纸的使用：

1.从水贴纸上剪下印花；
2.将印花放入温水中浸10秒，然后放在干净布上。
3.拿着印花纸板将印花移到模型上；
4.手指蘸水将印花移到适当的位置；
5.用软布轻压印花直至水干，汽泡消失。

DECAL APPLICATION:

1. Cut decals from sheet as needed
2. Dip the decal in warm water for about 10 seconds and then place on soft clean cloth.
3. Hold the decal backing sheet edge and gently slide the decal onto the model in its proper position.
4. While still wet,decal can be adjusted for better fit on model by dampening it gently with your finger.
5. When placed in the proper position,gently press decal down with a soft cloth until excess water and air bubbles are gone.
6. Allow decal to dry completely before handling model



部品图
Parts

AX2

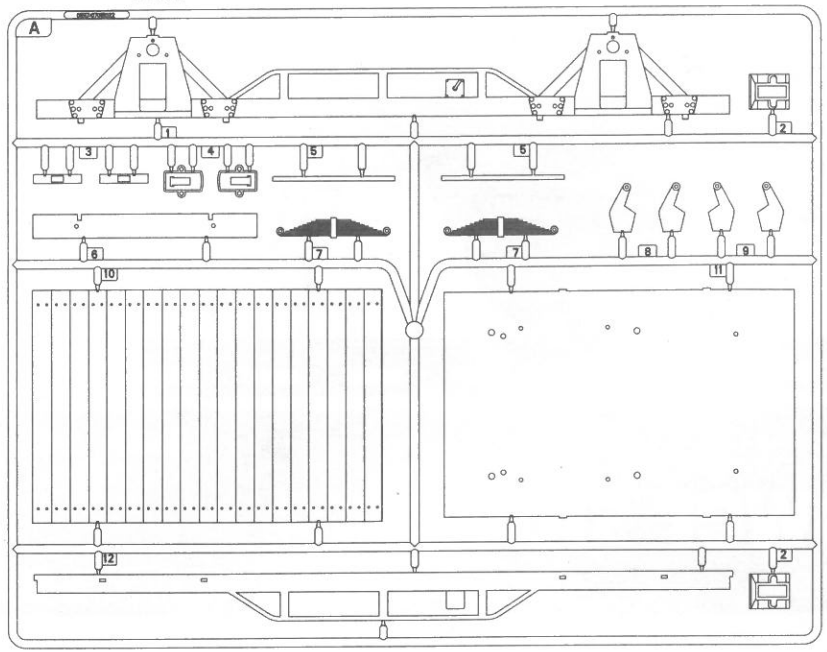

DX2

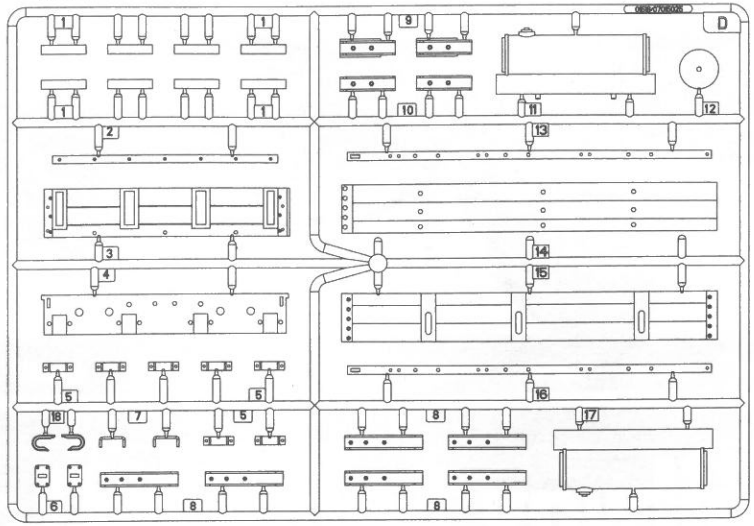

路基 -AX2
Road

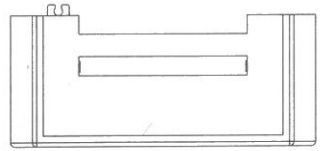

路基 -BX2
Road

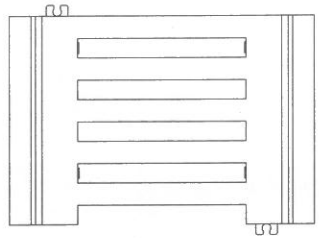

路基 -C
Road

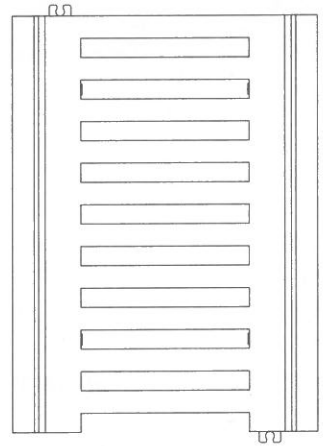

BX2

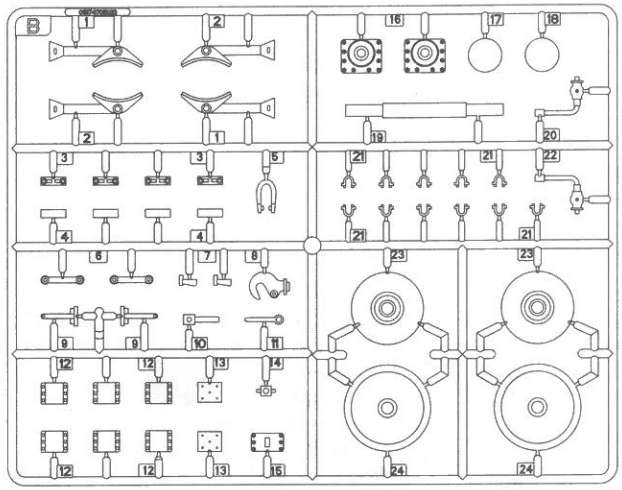

L

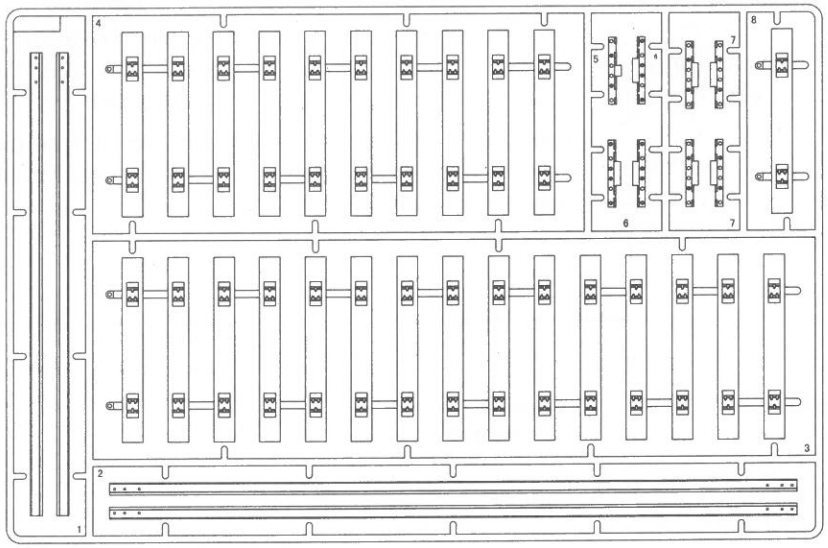



《水贴纸》
Decal

1 枕木安装
Attaching crosstie

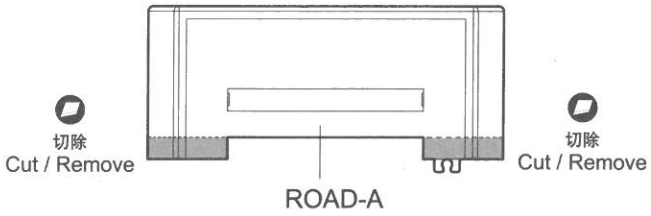

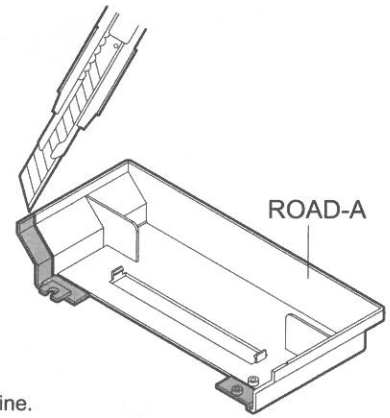

沿线切取其中1件
Cut only one sheet along this line.

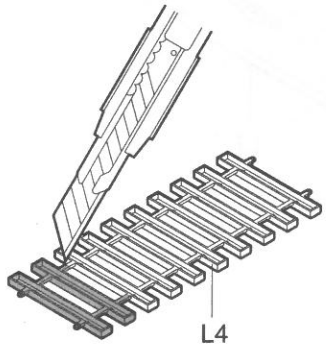

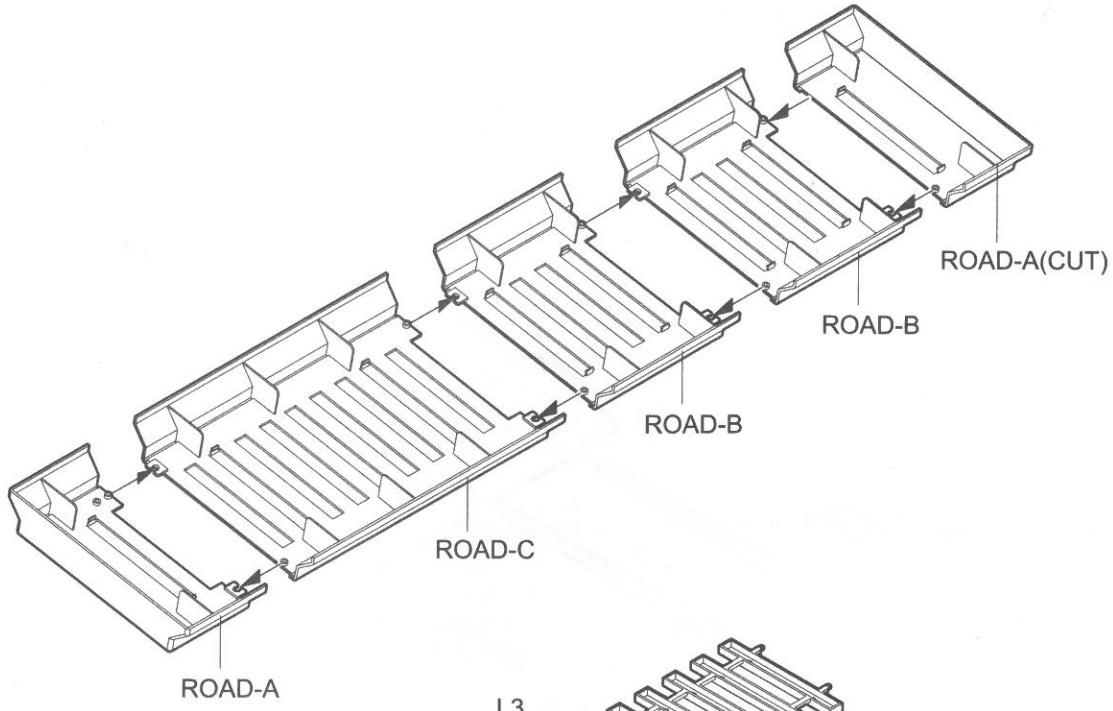

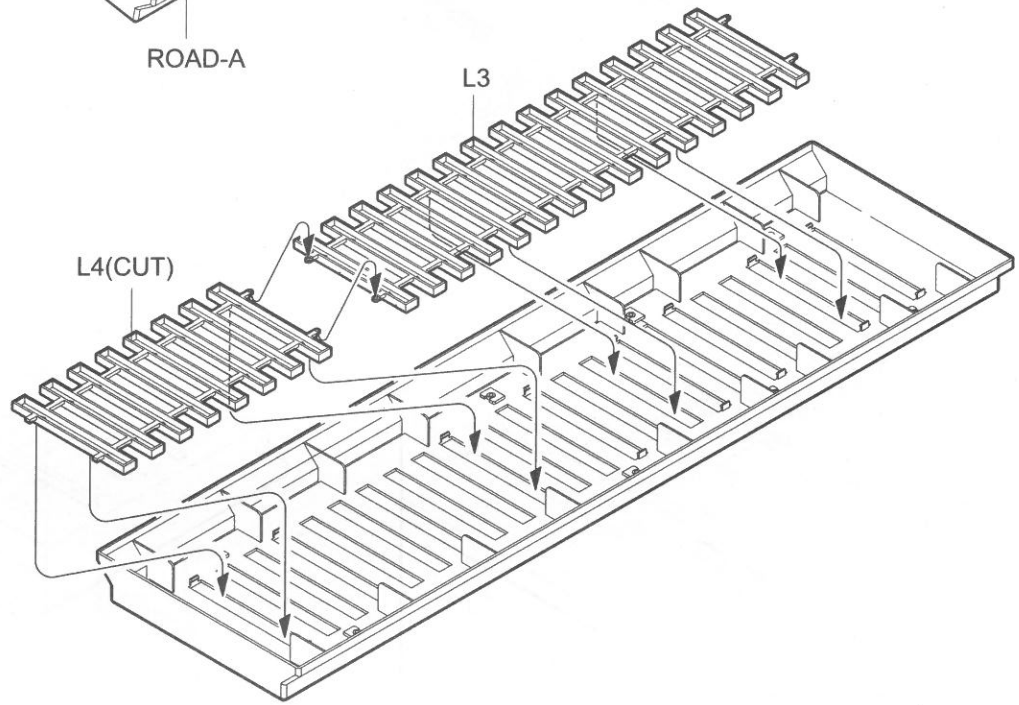

2 铁轨安装
Attaching rail

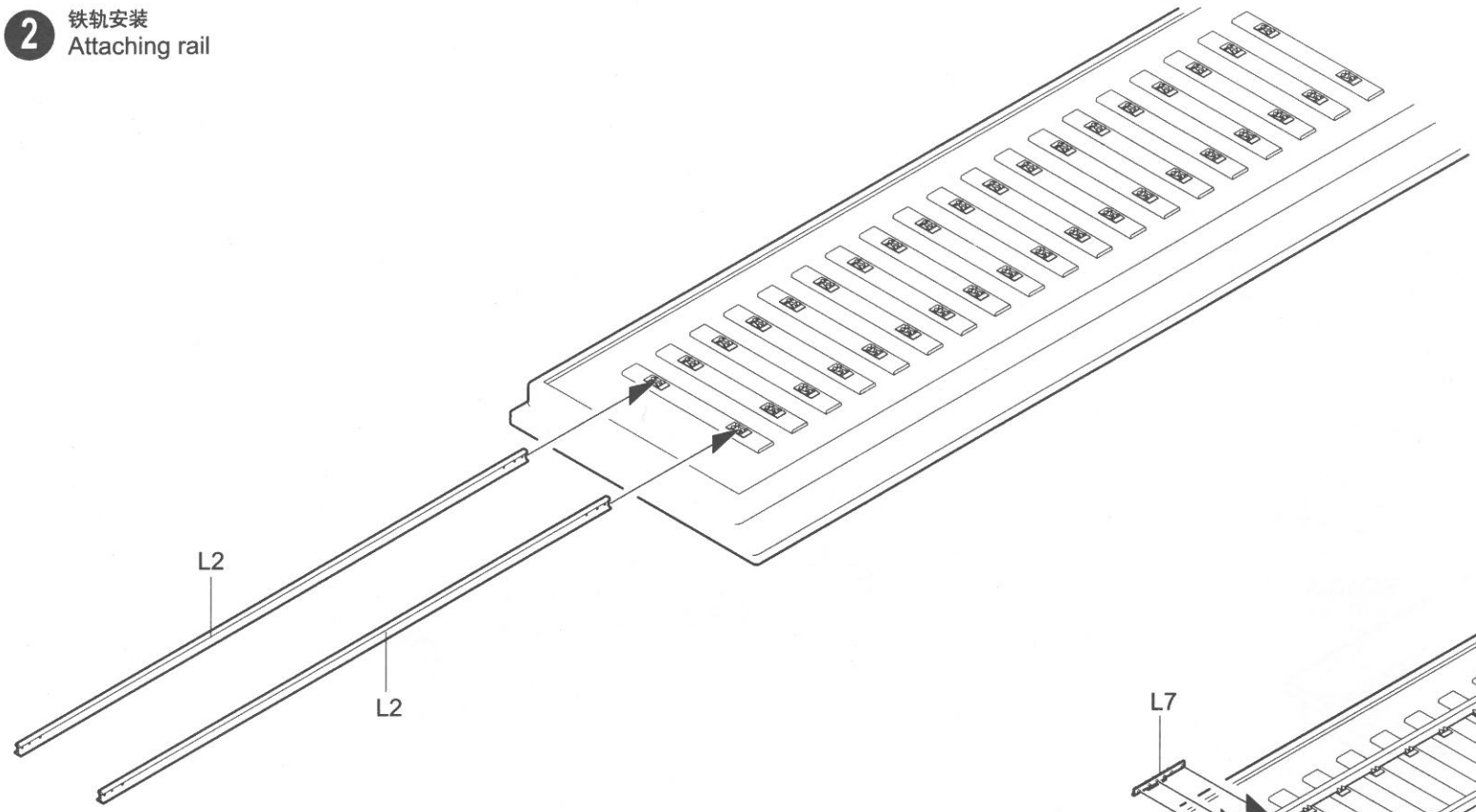

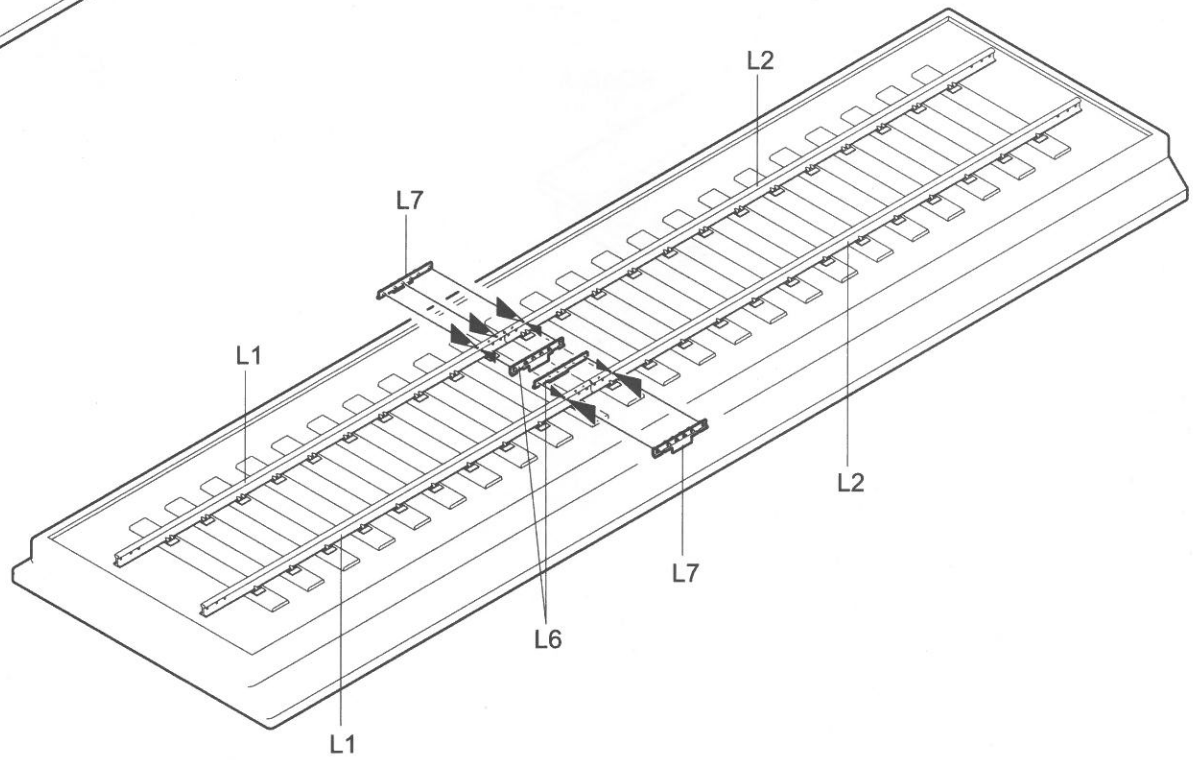

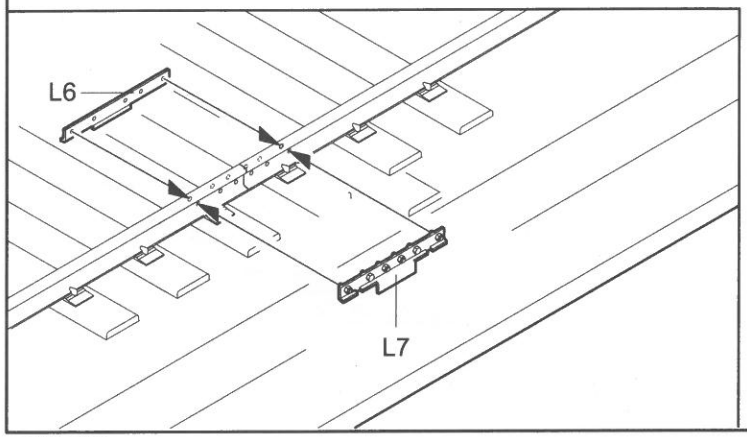

3 悬挂组装
Suspension assembly

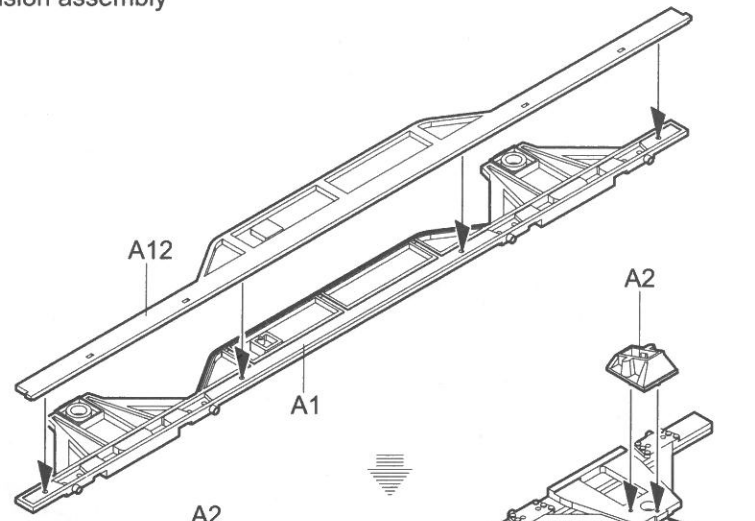

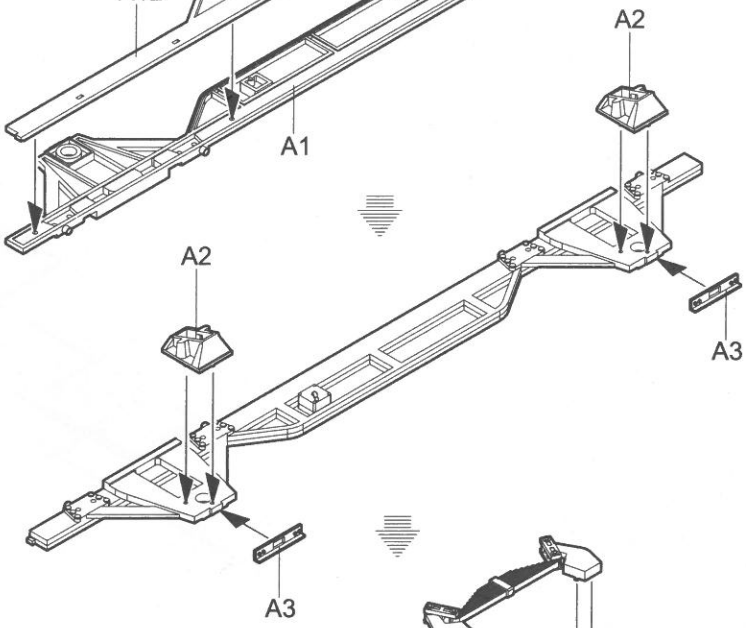

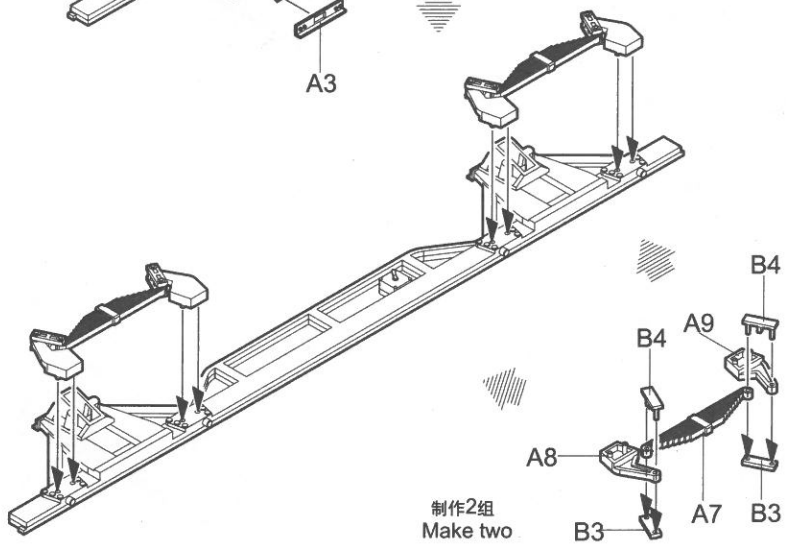

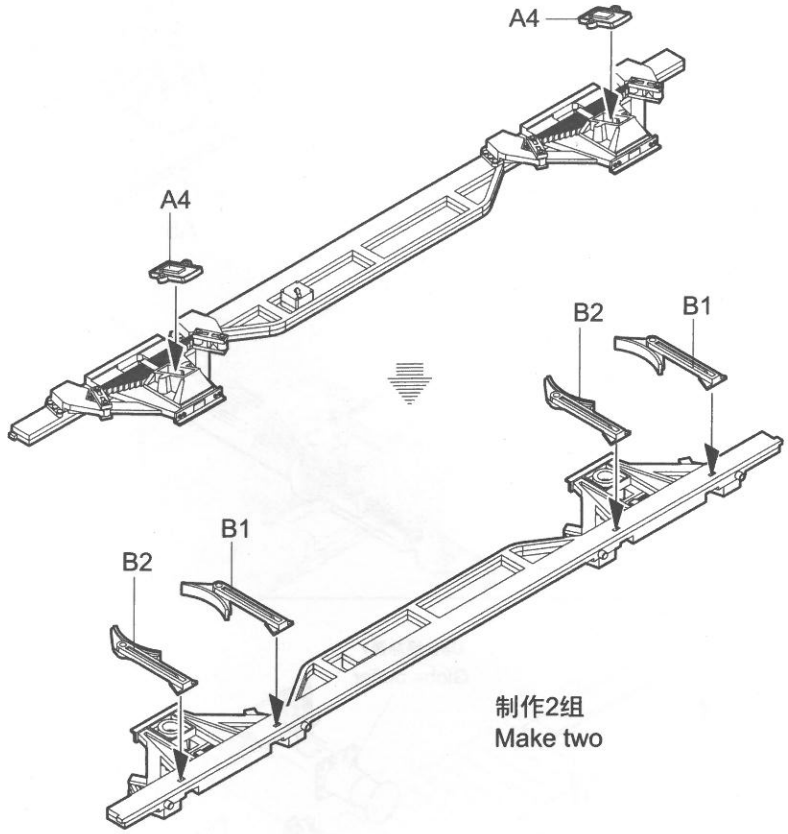

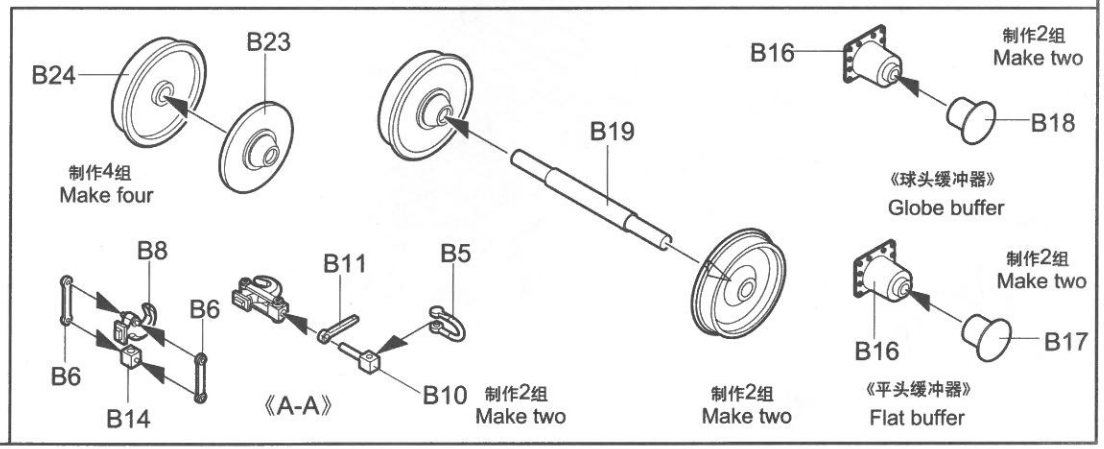

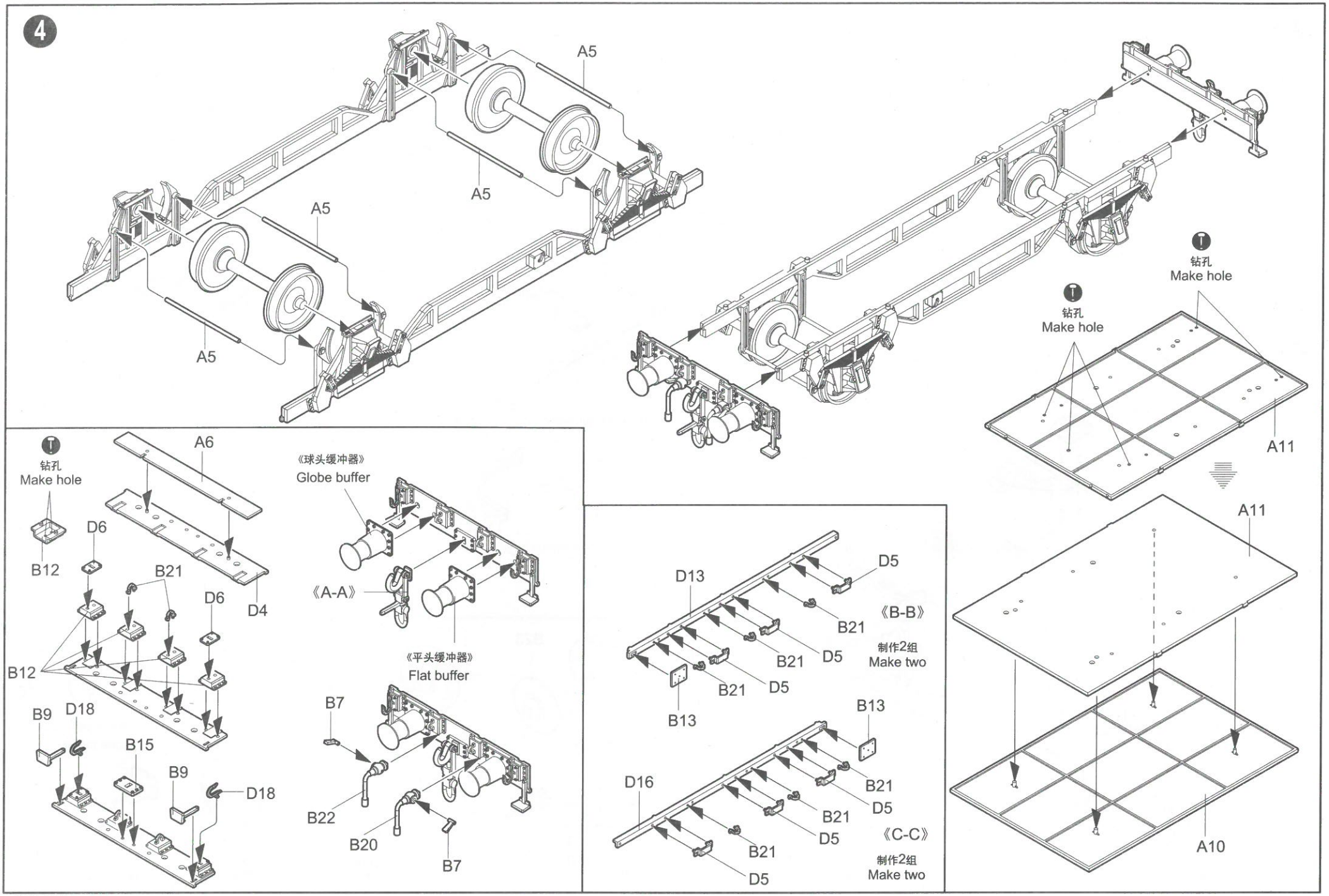
4
A5
A5
A5
A5
钻孔
Make hole
钻孔
Make hole
A11
A6
钻孔
Make hole
D6
B12
B21
D6
D4
B12
B9
D18
B15
B9
D18
《球头缓冲器》
Globe buffer
《A-A》
《平头缓冲器》
Flat buffer
B7
B22
B20
B7
D13
D5
B21
《B-B》
B21
D5
B21
D5
制作2组
Make two
B13
B13
D16
B21
D5
B21
D5
B21
D5
《C-C》
制作2组
Make two
A11
A10

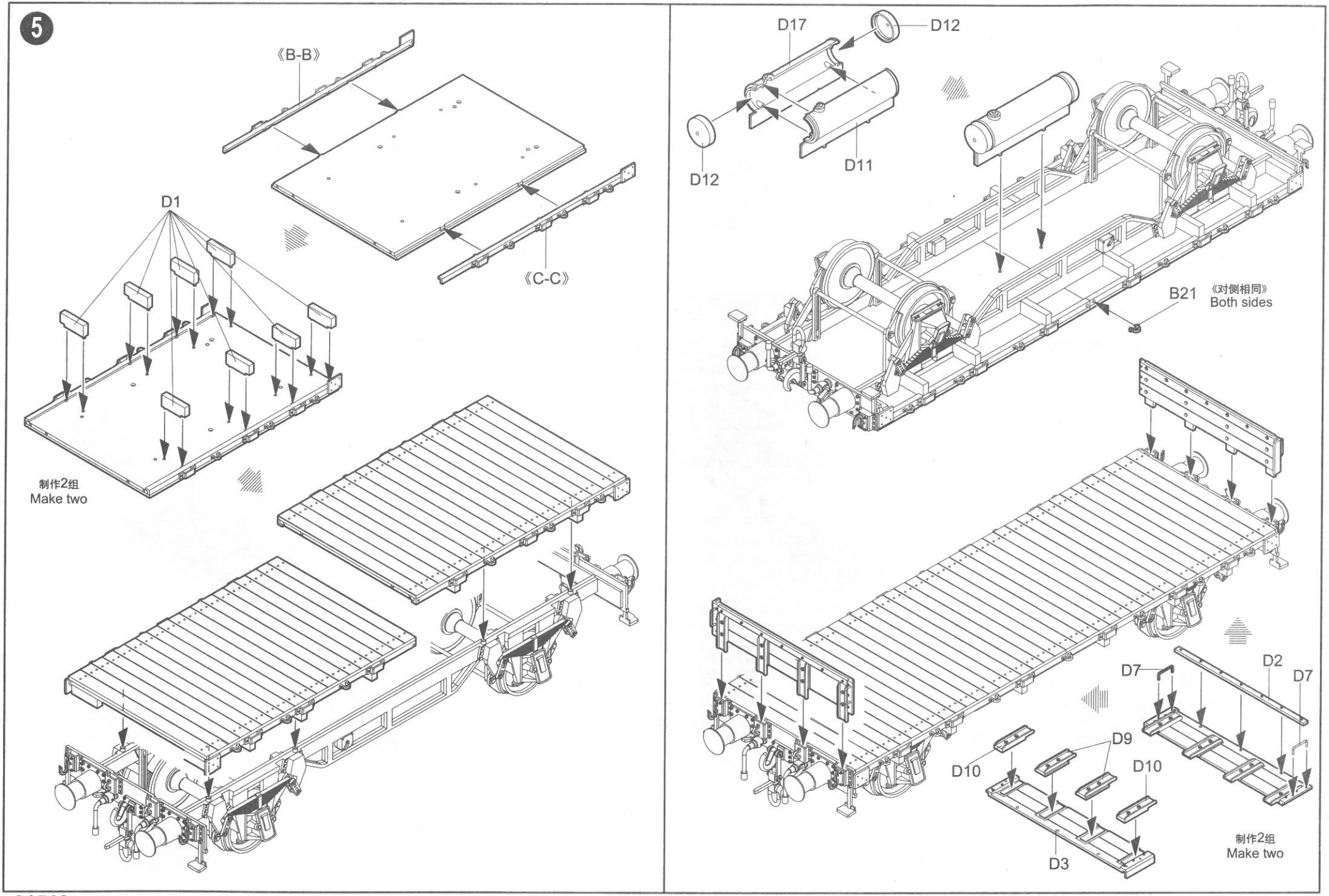
5
《B-B》
《C-C》
D1
制作2组
Make two
D17
D12
D12
D11
B21
《对侧相同》
Both sides
D7
D2
D7
D9
D10
D10
D3
制作2组
Make two

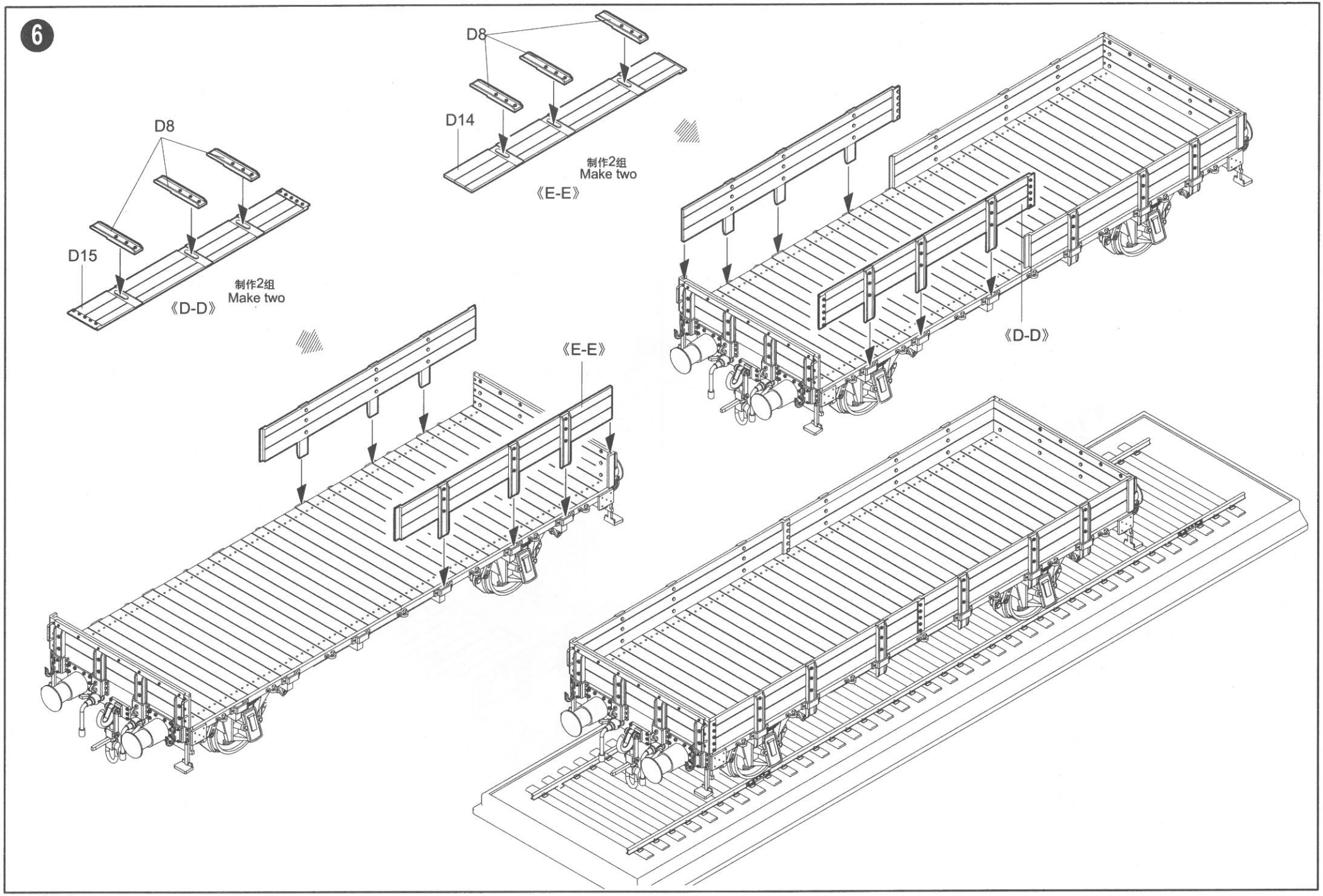
6
D8
D14
制作2组
Make two
《E-E》
D8
D15
制作2组
Make two
《D-D》
《D-D》
《E-E》

涂装同标贴指示
Painting & Marking guide

PAINT REFERENCE COLOUR

Color	Mr.Hobby	Vallejo	Model Master	Tamiya	Humbrol
Field Gray 野灰	H 32 40	830	–	XF22	111

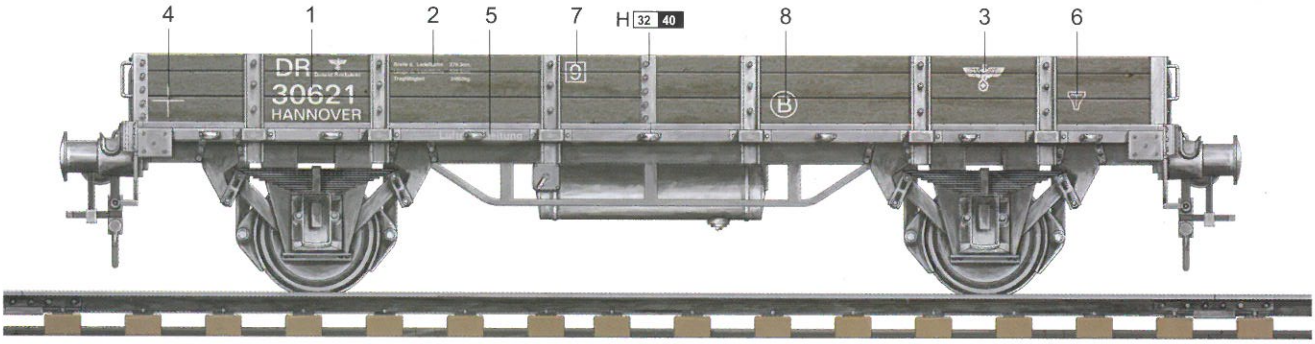



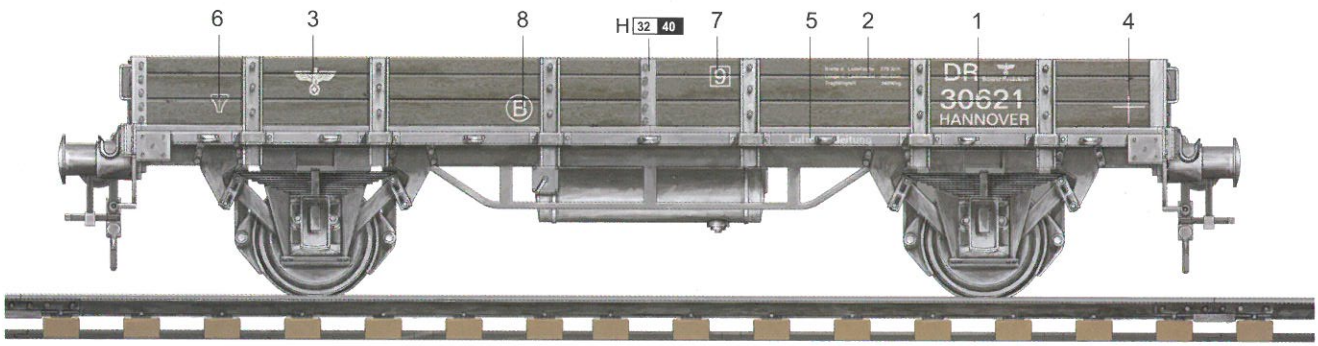

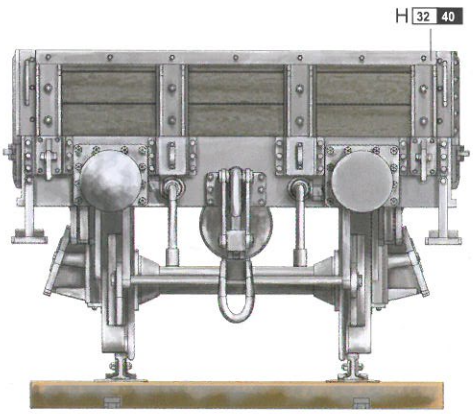

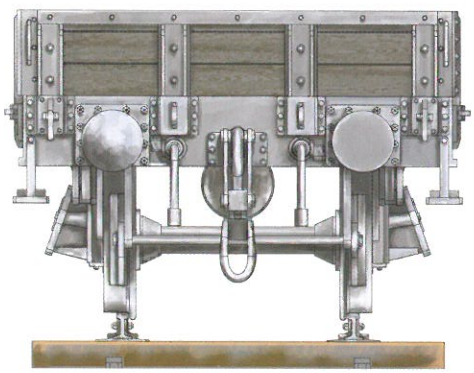

H AQUEOUS HOBBY COLOR ■ Mr. COLOR

01518 1/35 German Railway Gondola (Lower sides)