RFM
RYEFIELD MODEL

5030
MILITARY MINIATURE SERIES

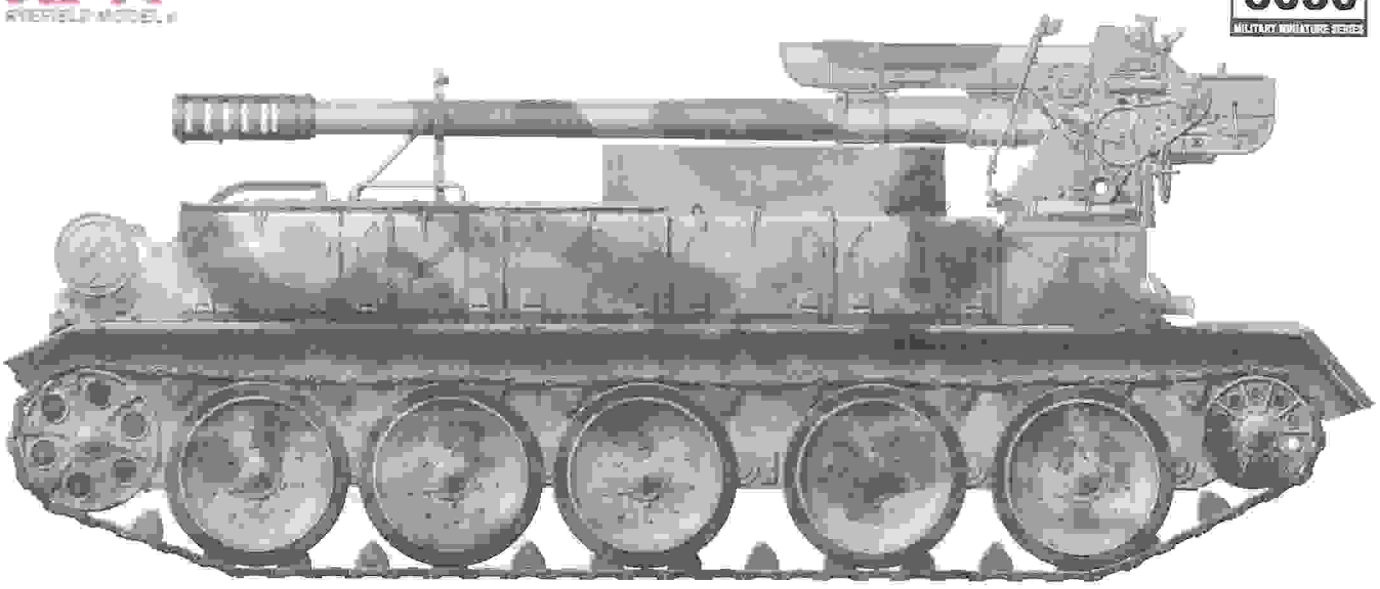

T-34/ D30 122MM

SYRIAN SELF-PROPELLED HOWITZER

叙利亚 T-34/D30 自行榴弹炮 · T-34/D30 自走砲 シリア軍

ASSEMBLY ICONS

OPTIONAL 选择	CEMENT 膠水	DO NOT CEMENT 不使用膠水	INSTANT CEMENT 瞬間接著劑	BEND 彎折
x2 MAKE 2 製作2組	OPEN HOLE 鑽孔	REMOVE 切除	BE CAREFUL 注意	APPLY DECAL 貼上水貼紙

CAUTION!

Read carefully and fully understand the instructions before commencing assembly.
Supervising adult should also read the instructions if a child assembles the model.
When you used glue or paint,do not use near a naked flame, and use in a well-ventilated room.
When assembling this kit, tools including knives are used. Extra care should be taken to avoid personal injury.
Read and follow the instructions supplied with paints and/ or cement. Use plastic cement and paints only.
Keep out of reach of small children. Children must not be allowed to suck any part, or pull vinyl bag over the head.

在裝配前仔細閱讀說明並完全理解。小孩裝配時需成人看護且零仔細閱讀說明。
使用膠水和油漆時，應遠離火源並打開窗戶保持空氣流通。
製作時請格外注意工具刀和零件的鋒利尖銳部分，避免對身體造成傷害。
在使用膠水和油漆前仔細閱讀注意事項，按照說明正確使用膠水和油漆。
請將本品放在兒童接觸不到的地方，套件中的塑膠包裝袋會對兒童造成窒息的危險.

©2019 RYEFIELD MODEL

PARTS • 部品图

B: 2 pieces

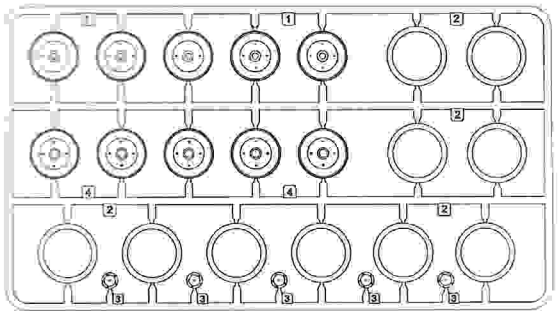

D: 1 piece

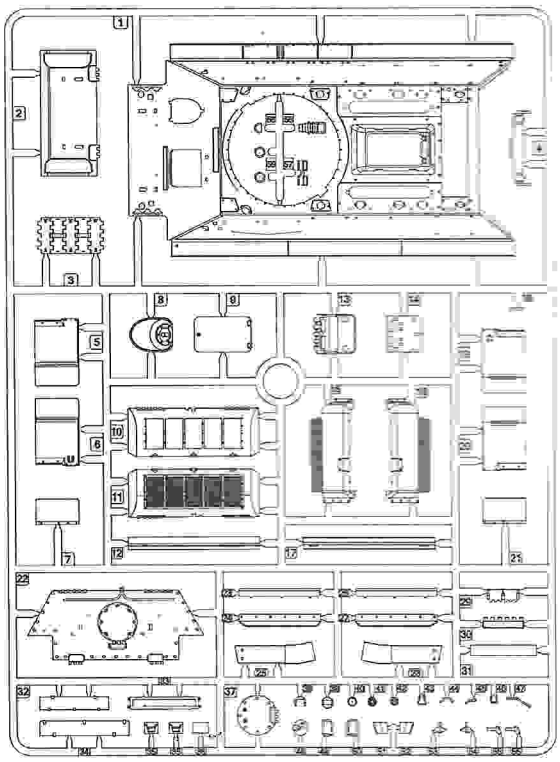

H: 1 piece

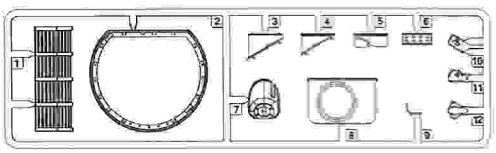

G: 2 pieces

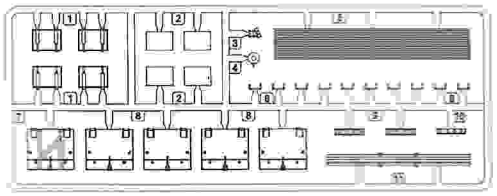

C: 2 pieces

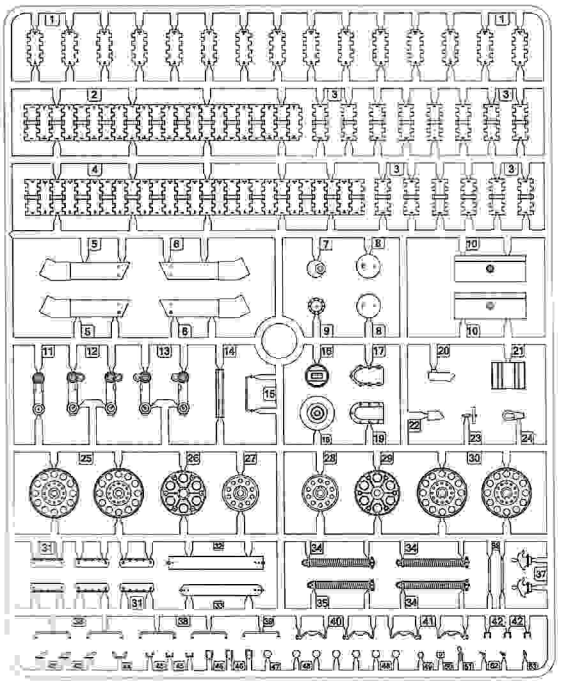

F: 1 piece

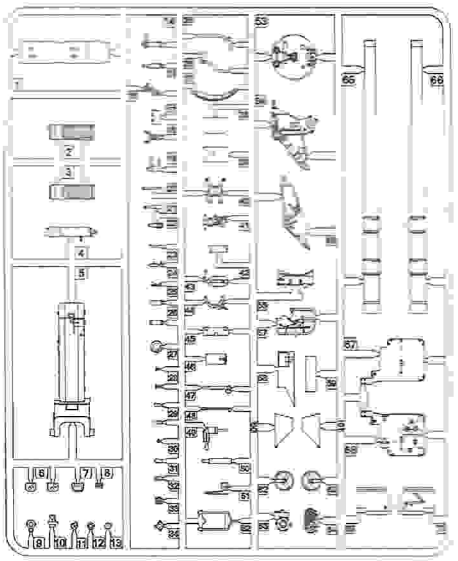

Lower Hull: 1 piece

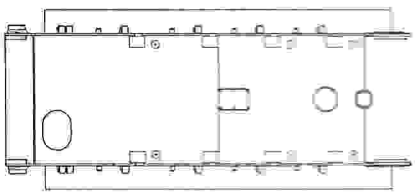

Y: 1 piece

STEP 1

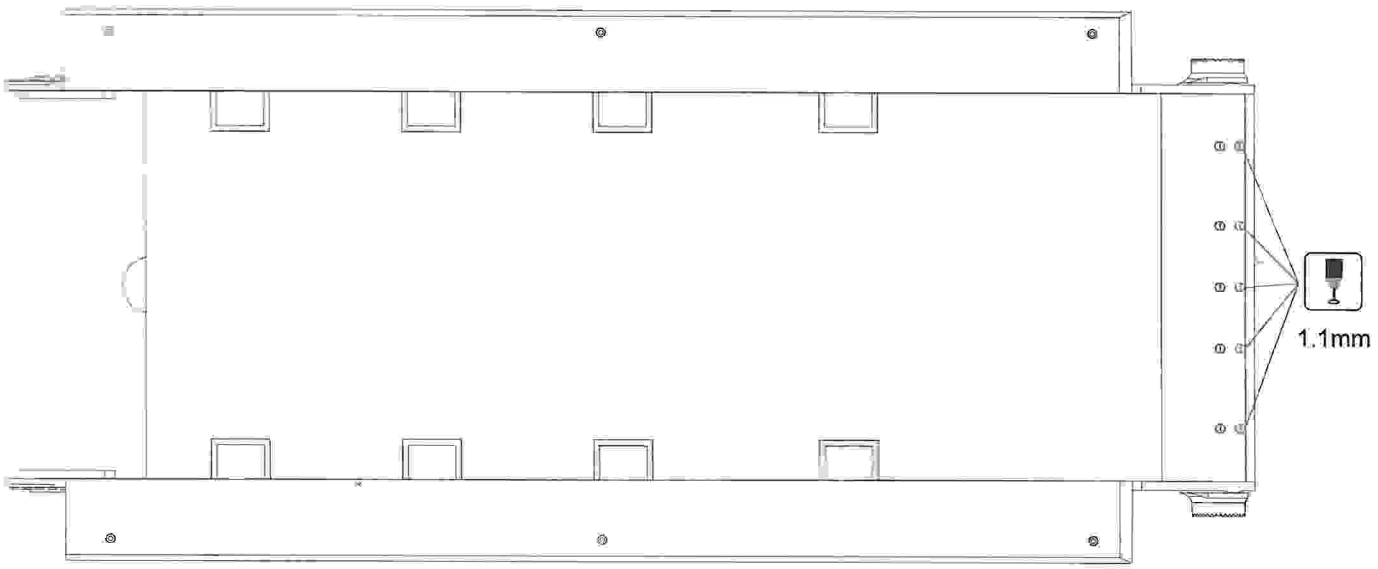
1.1mm

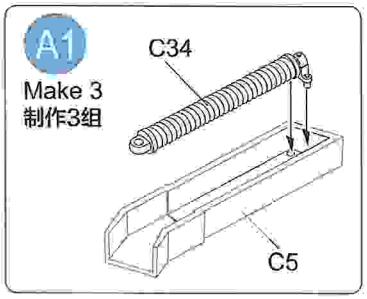
A1
Make 3
制作3组
C34
C5

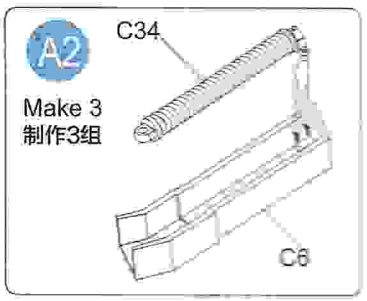
A2
Make 3
制作3组
C34
C6

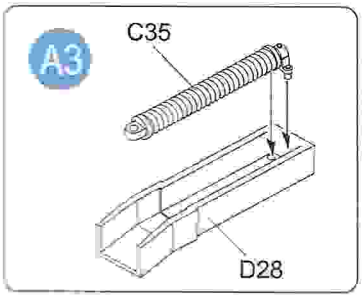
A3
C35
D28

A4
C35
D25

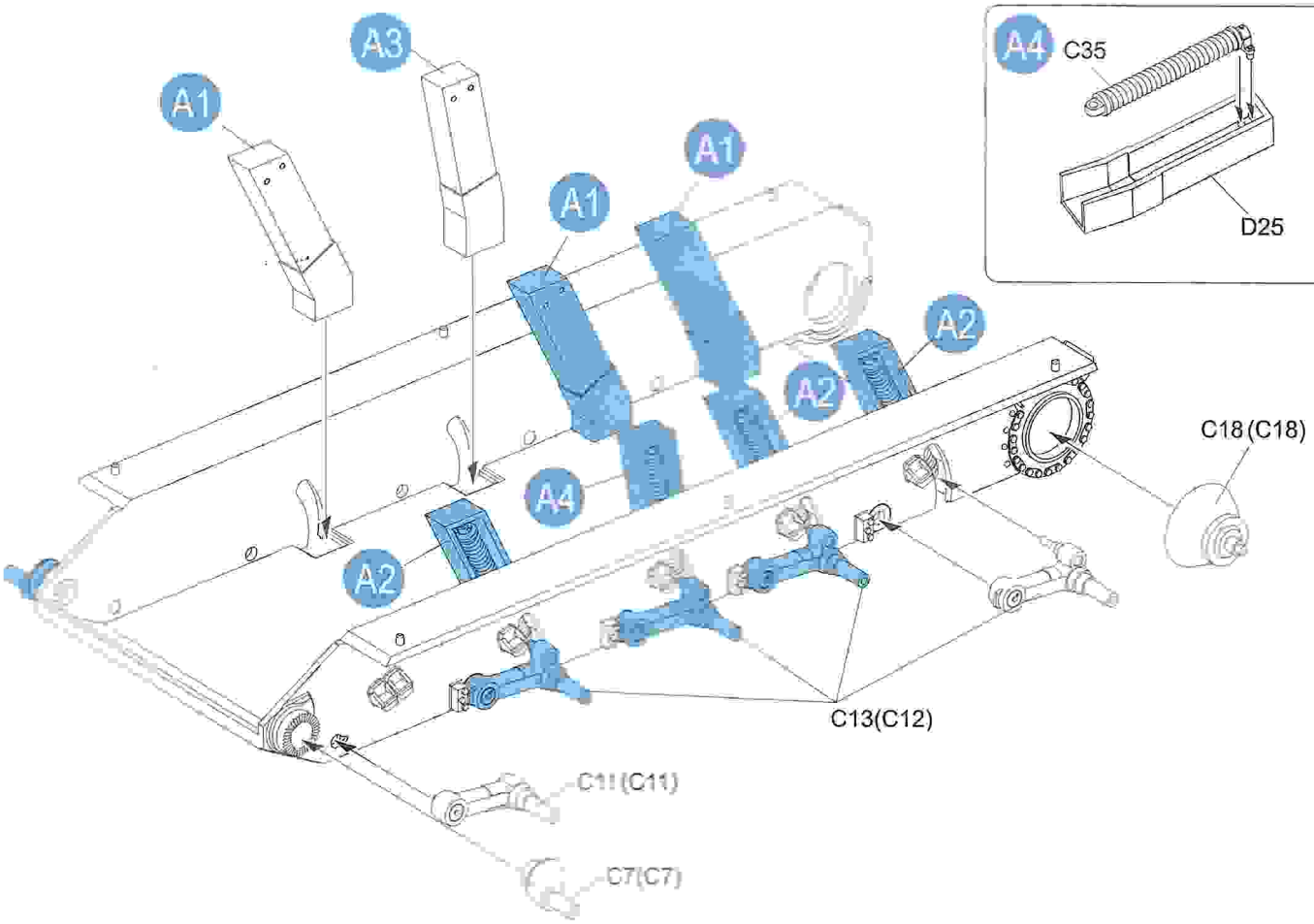
A3
A1
A1
A1
A2
A2
A4
A2
C18(C18)
C13(C12)
C11(C11)
C7(C7)

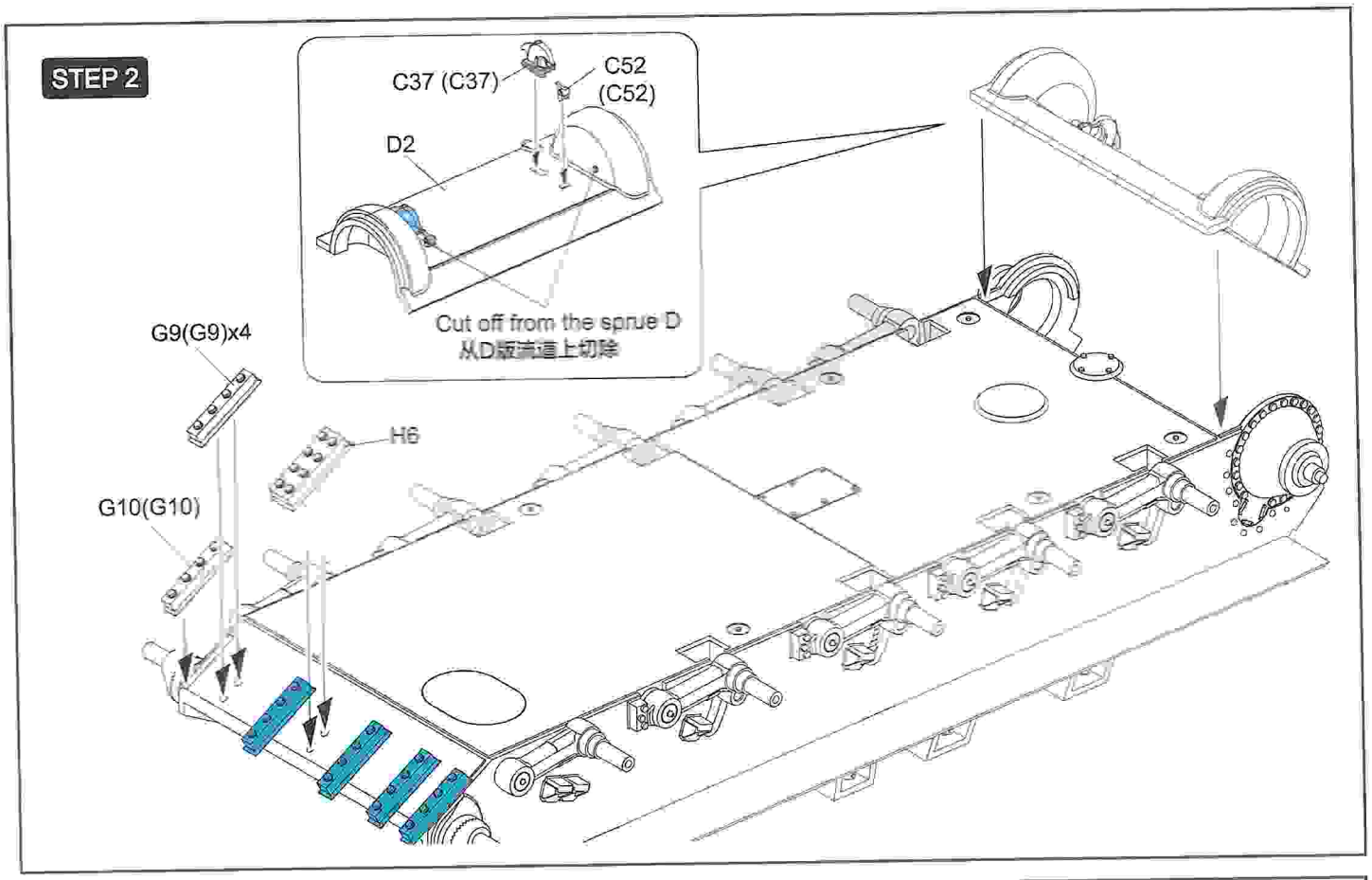

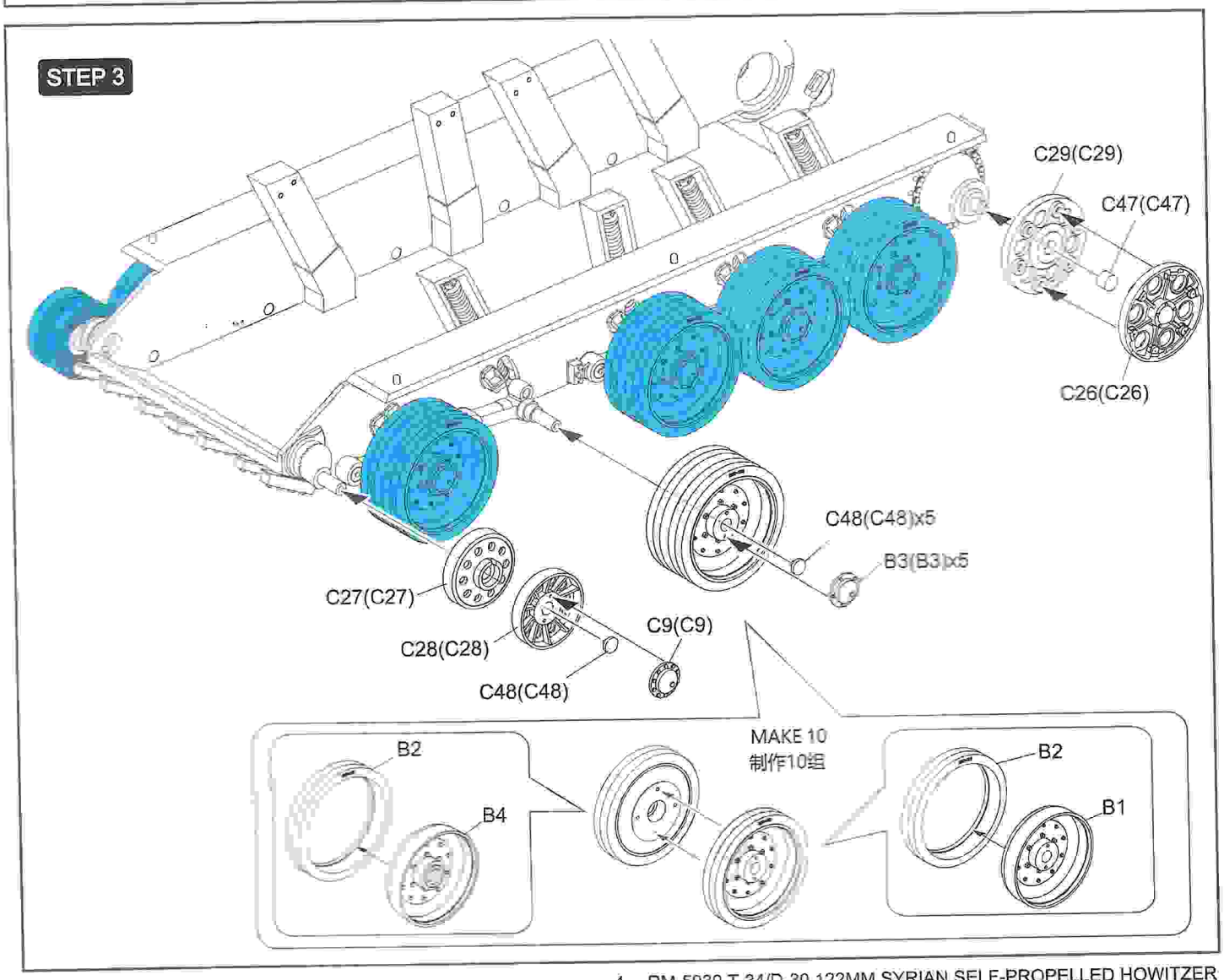

©2019 RYEFIELD MODEL

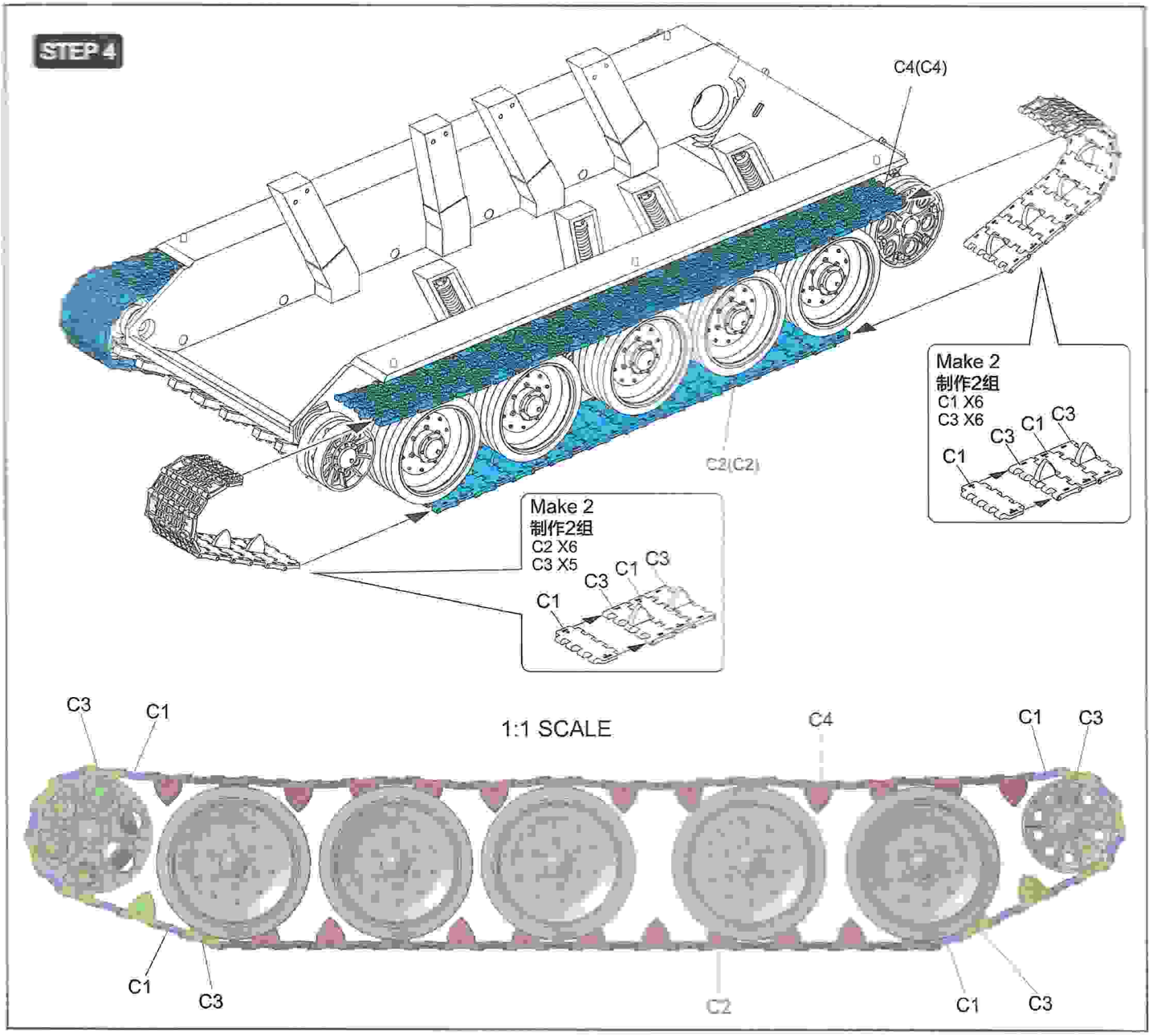
STEP 4
C4(C4)
C2(C2)
Make 2
制作2组
C1 X6
C3 X6
C1
C3
C3
C1
C3
Make 2
制作2组
C2 X6
C3 X5
C1
C3
C3
C1
1:1 SCALE
C3
C1
C4
C1
C3
C1
C3
C2
C1
C3

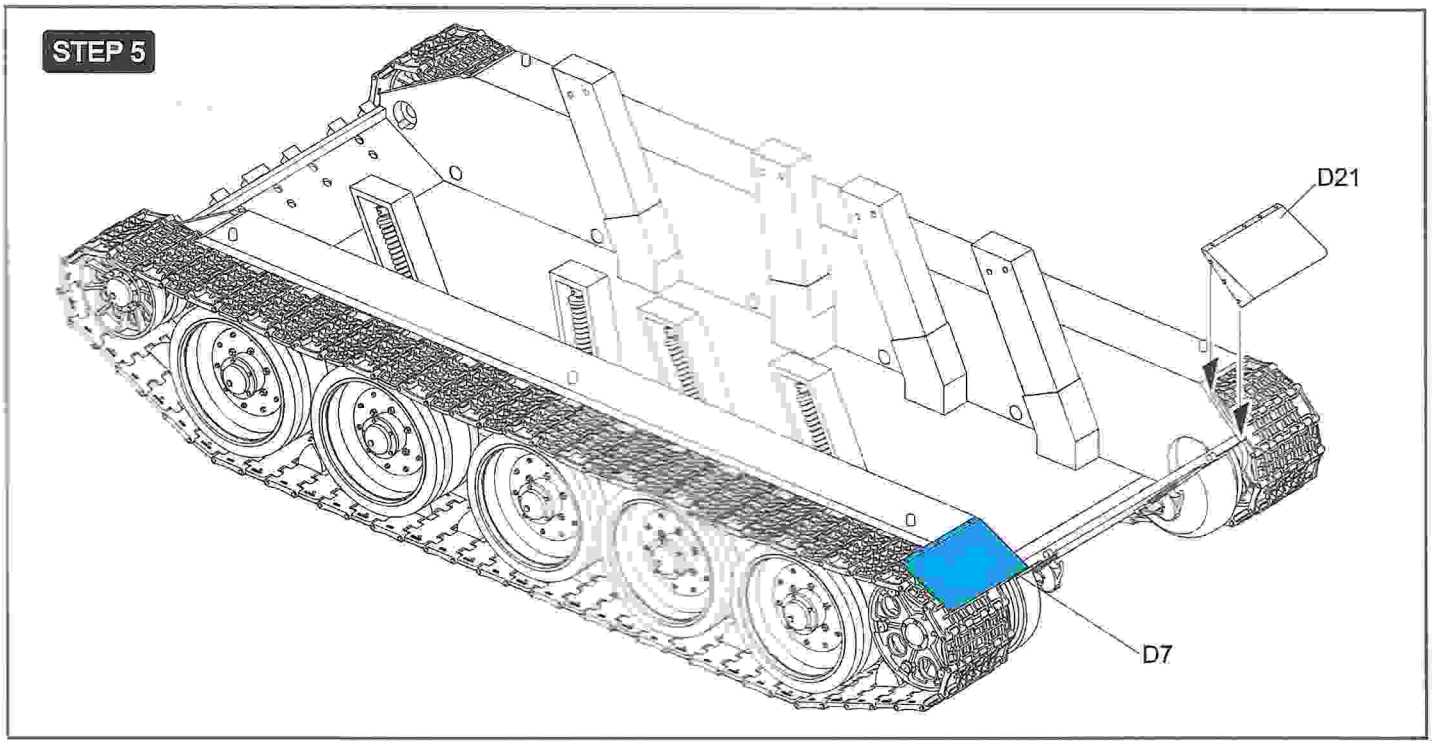
STEP 5
D21
D7

STEP 6

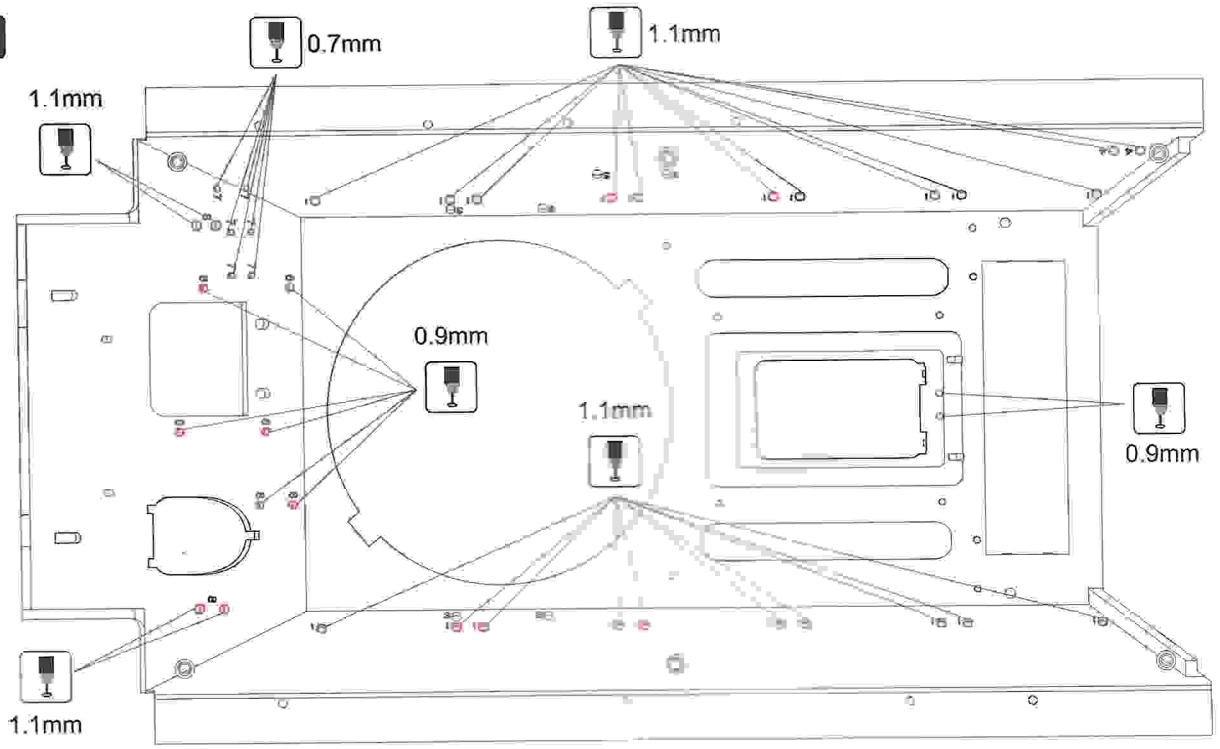

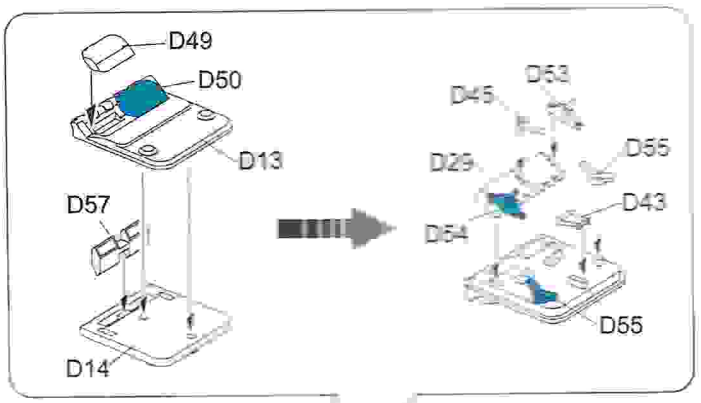

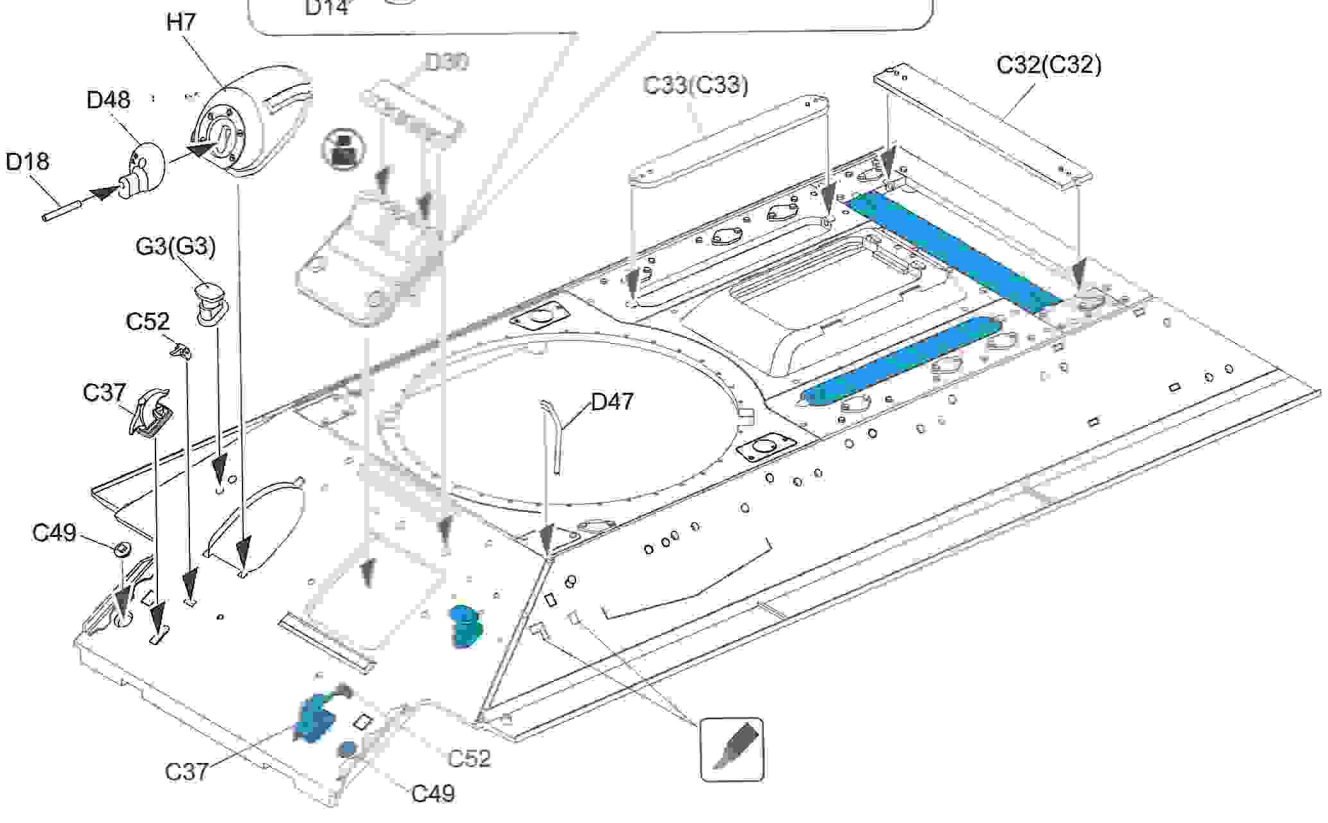

©2019 RYEFIELD MODEL

STEP 7

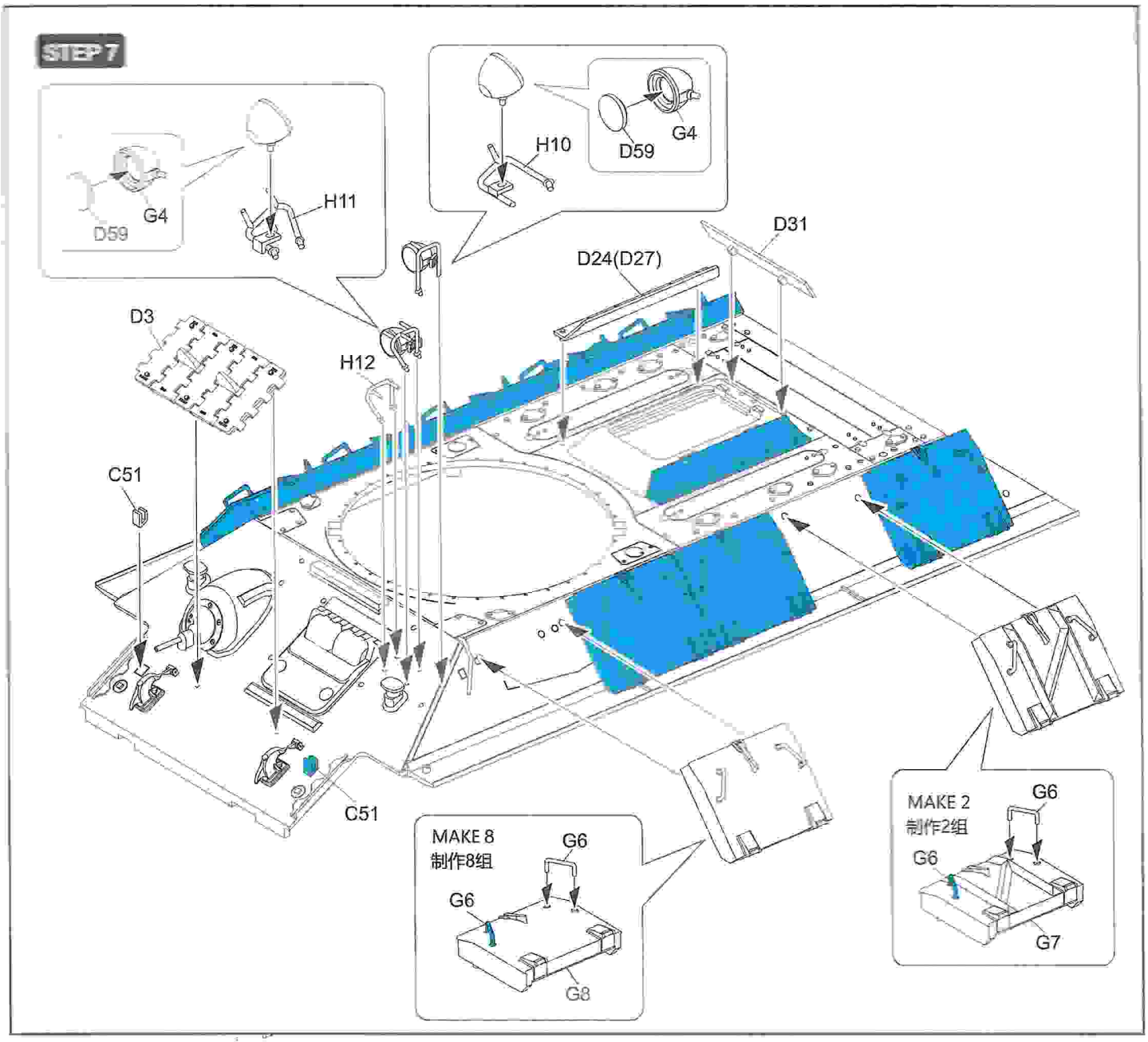

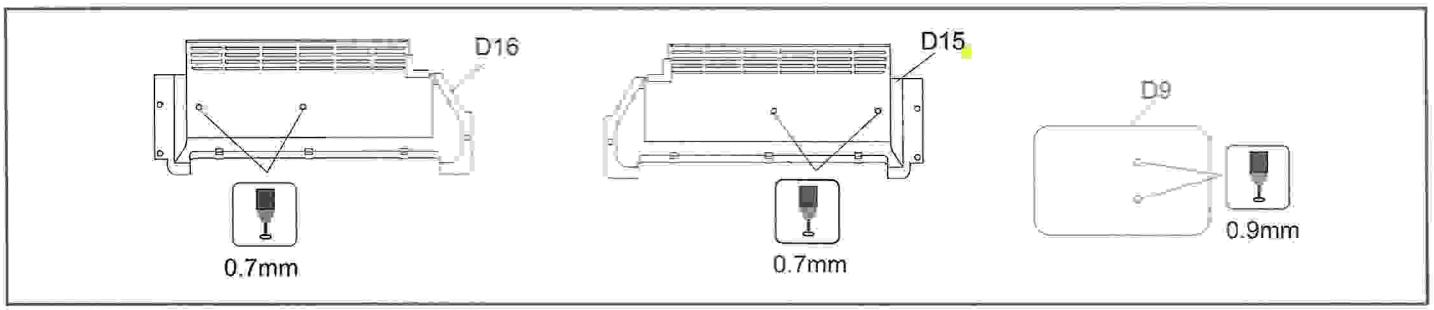

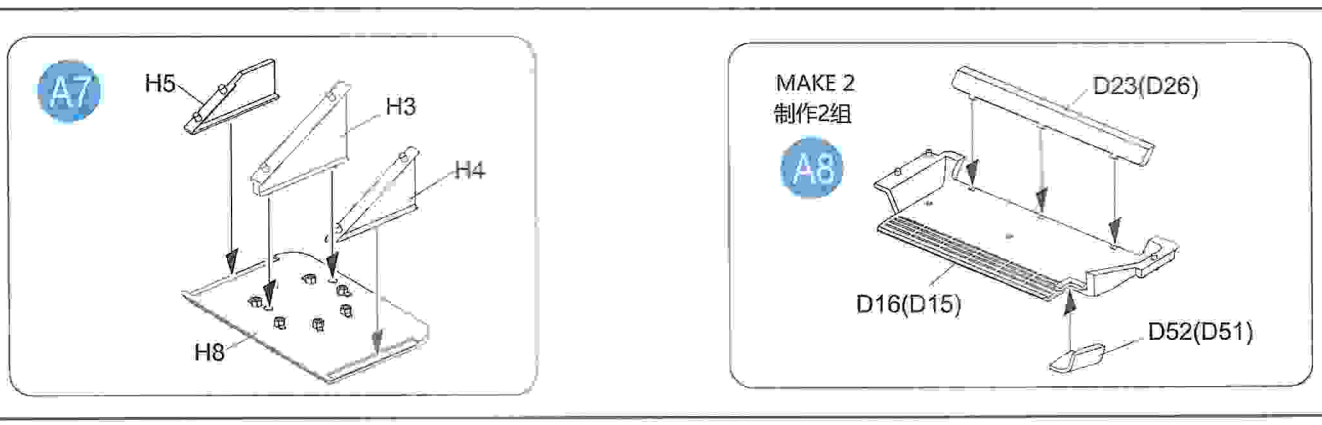

©2019 RYEFIELD MODEL

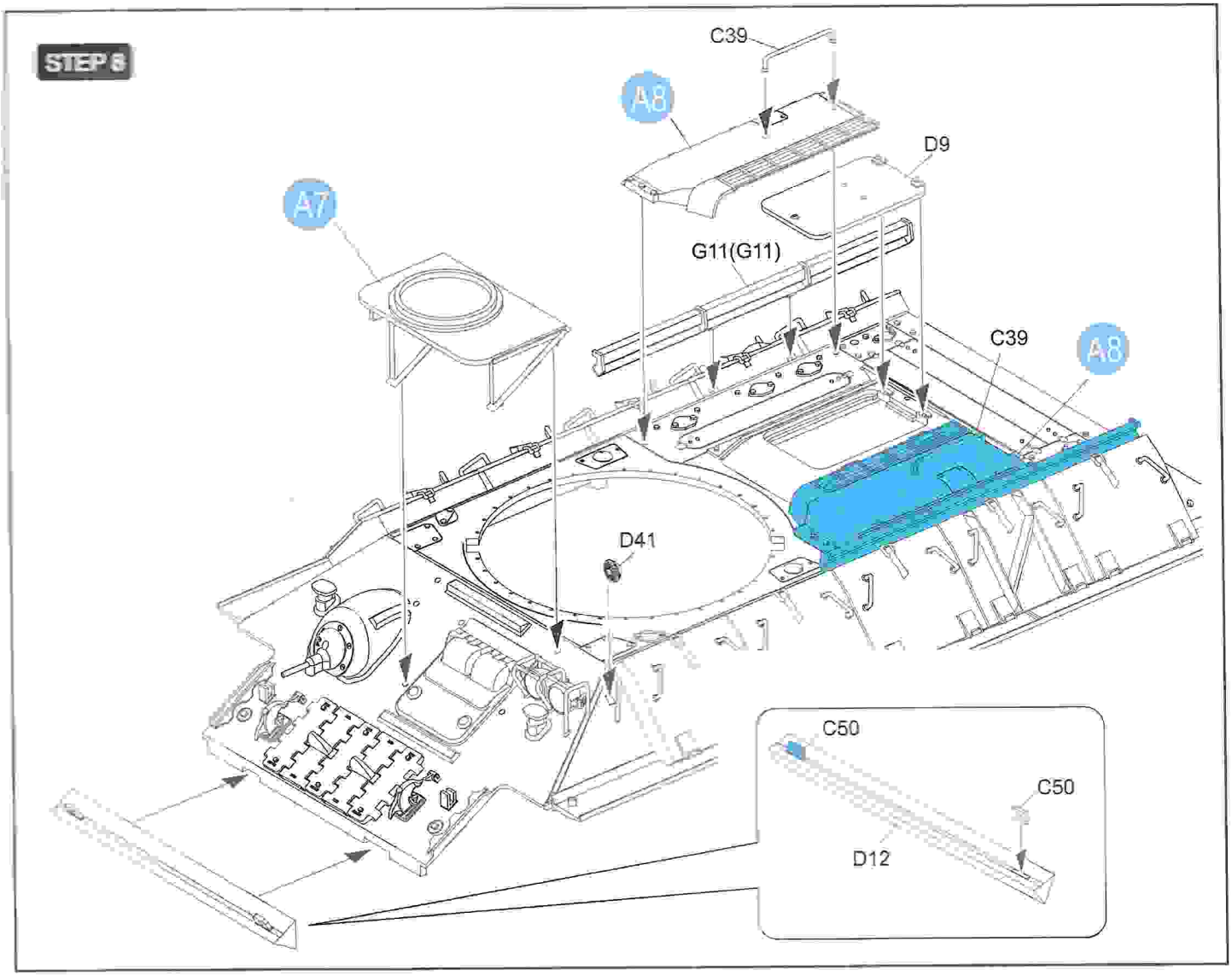

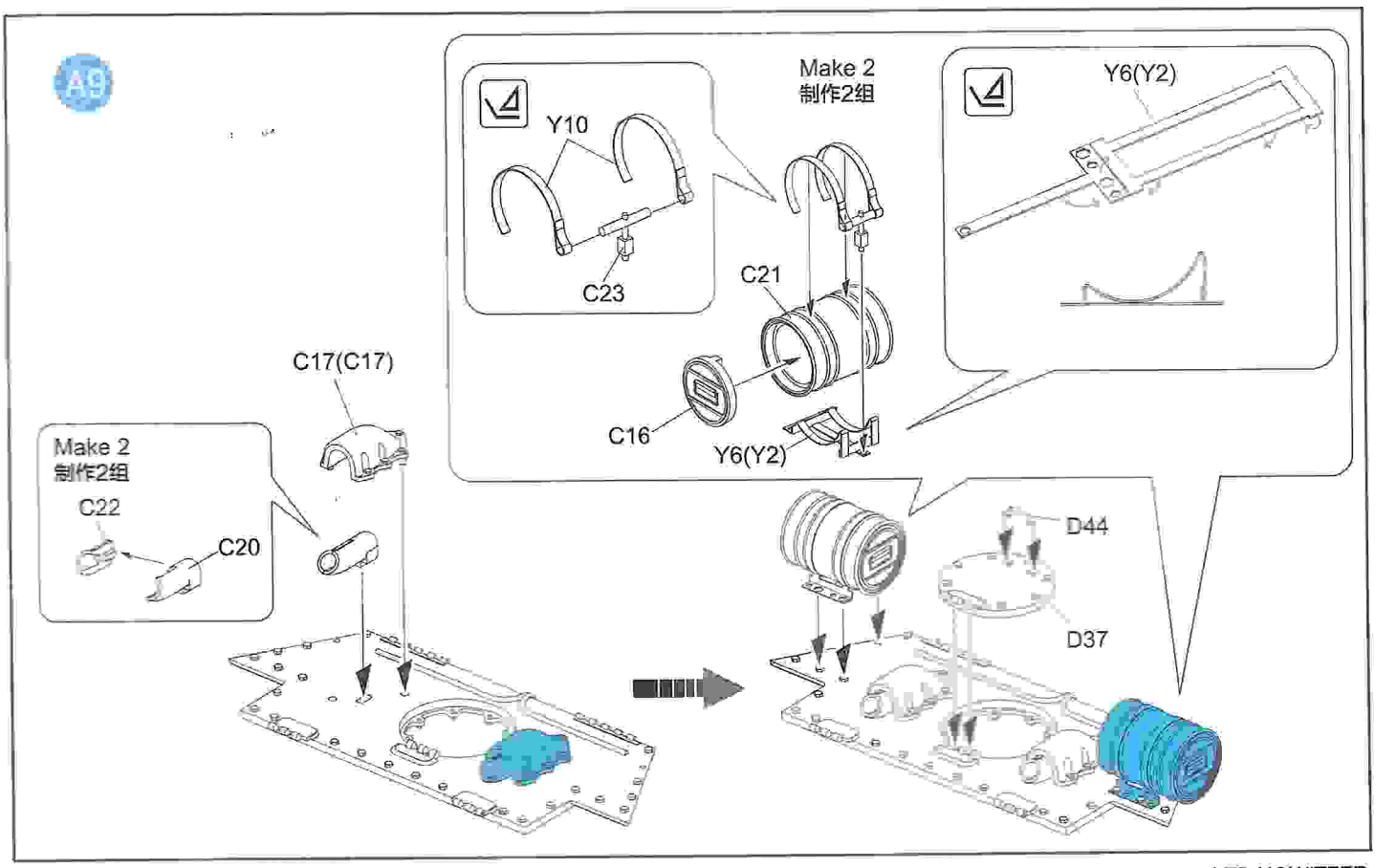

©2019 RYEFIELD MODEL

STEP 9

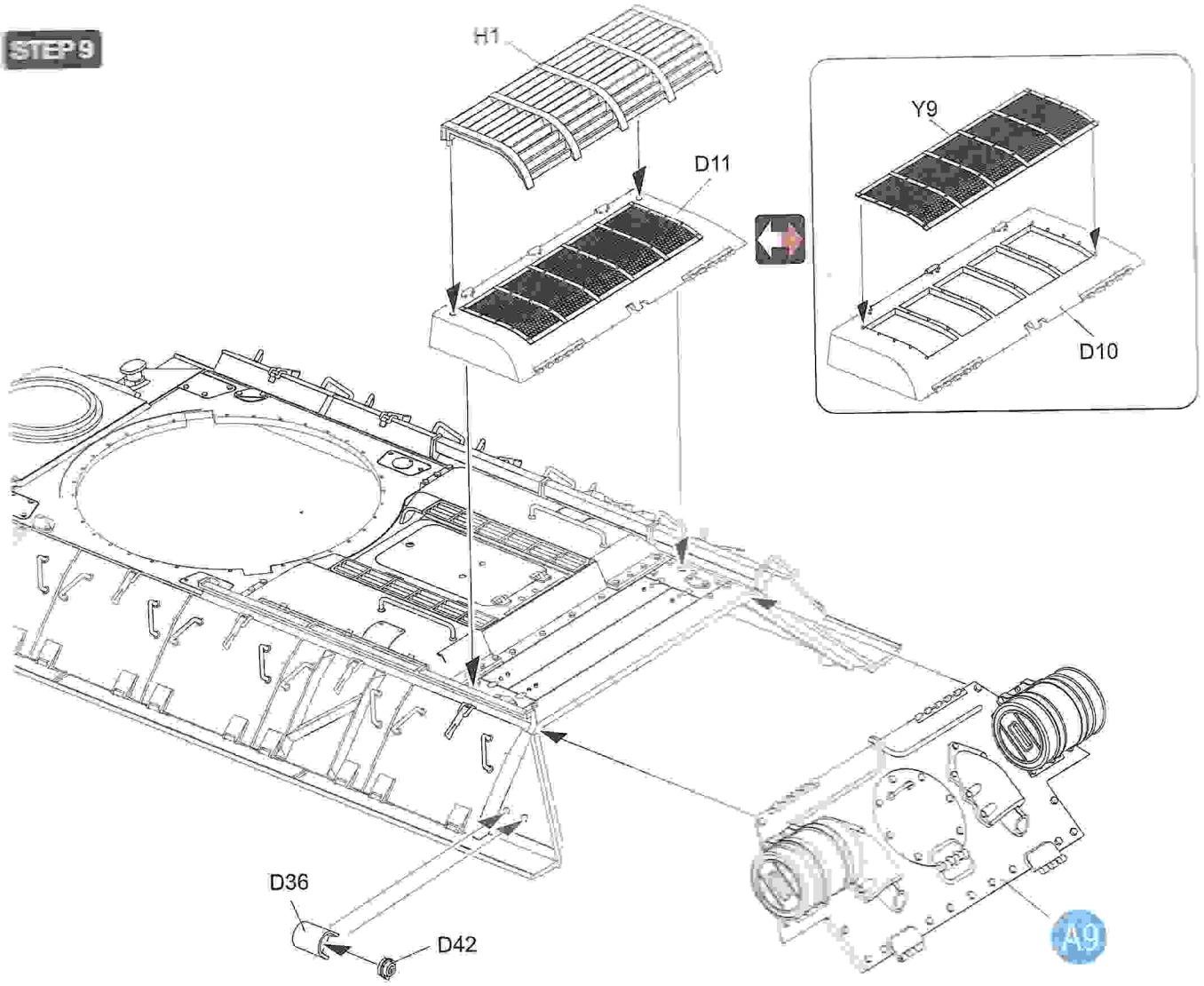

B1

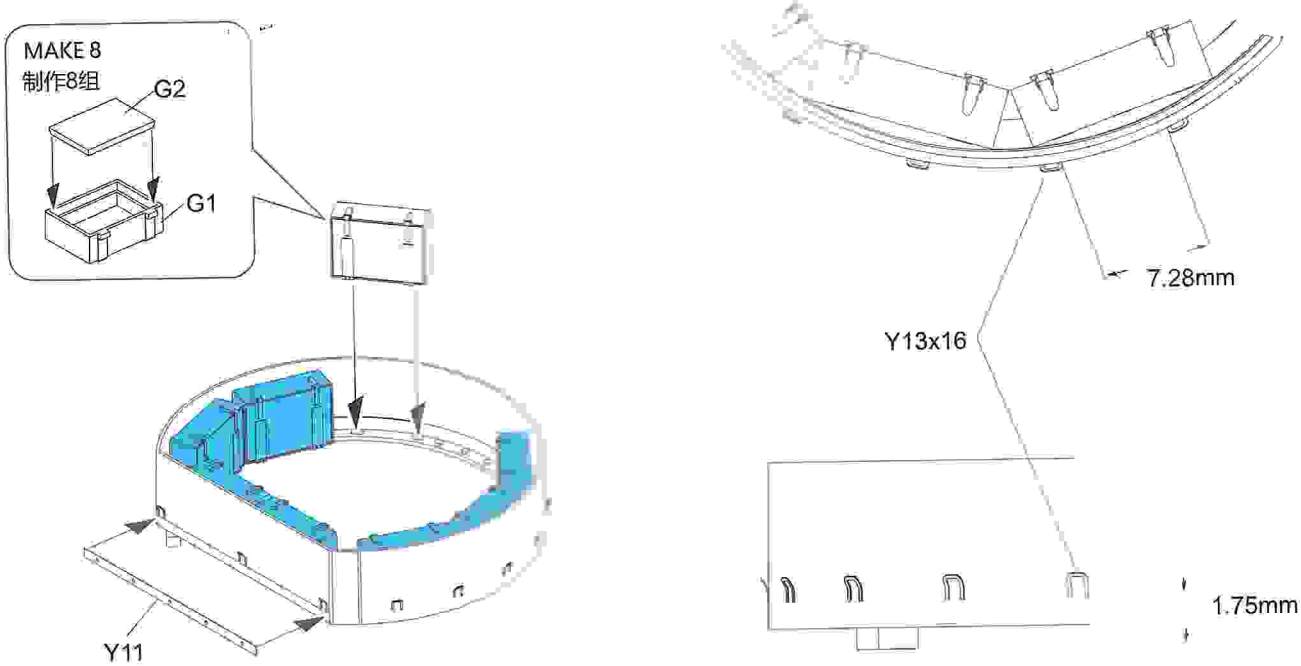

©2019 RYEFIELD MODEL

STEP 10

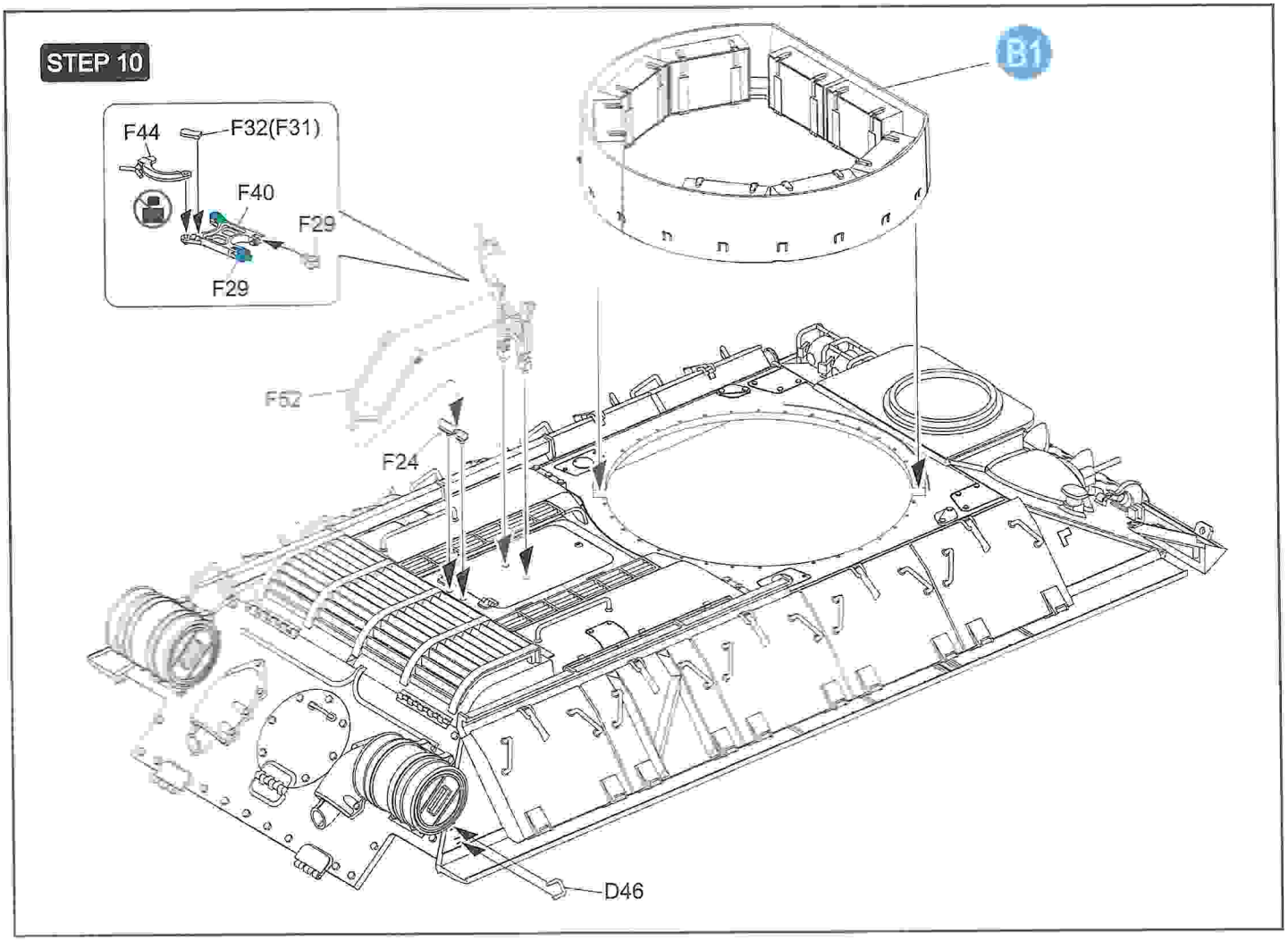

STEP 11

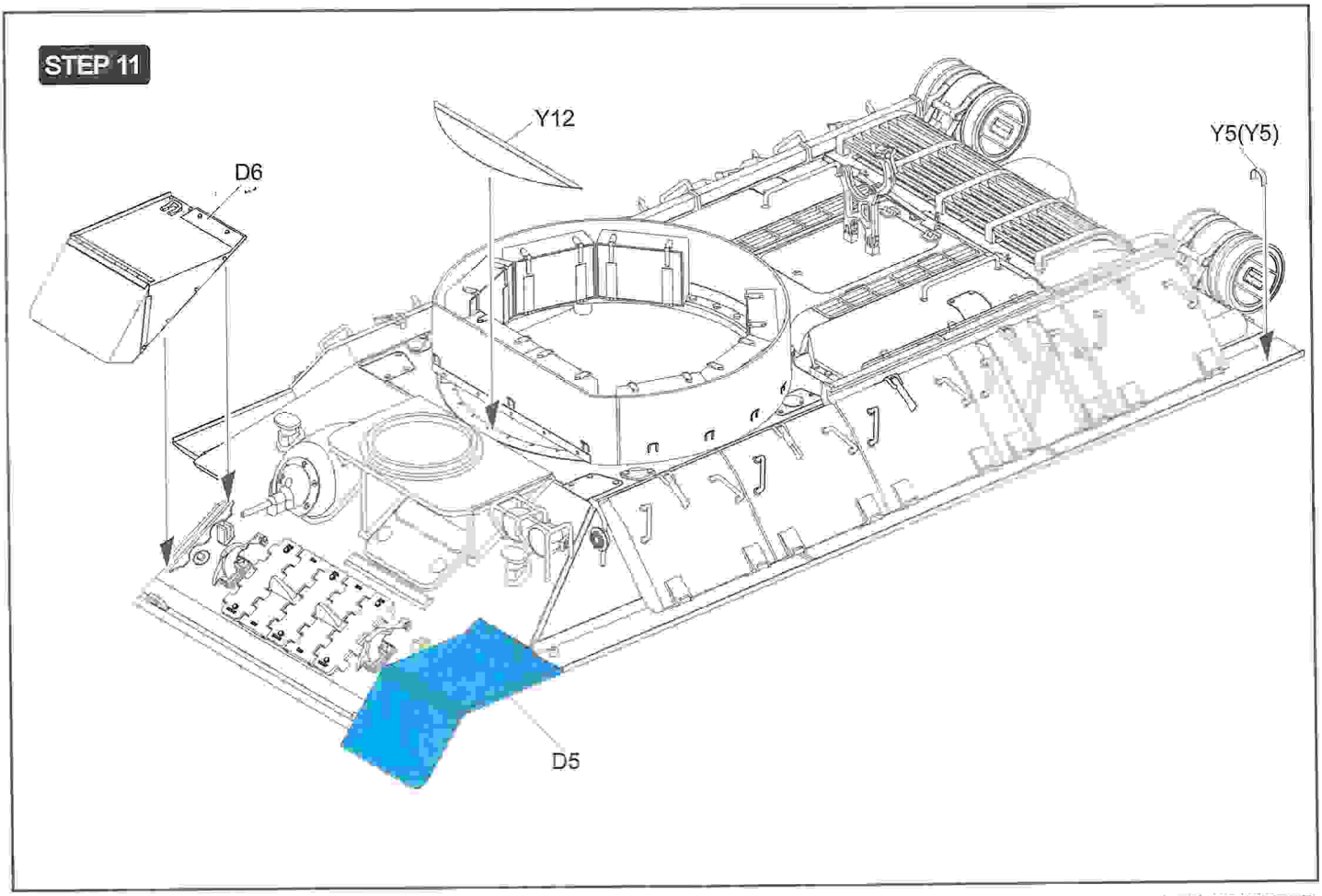

©2019 RYEFIELD MODEL

STEP 12

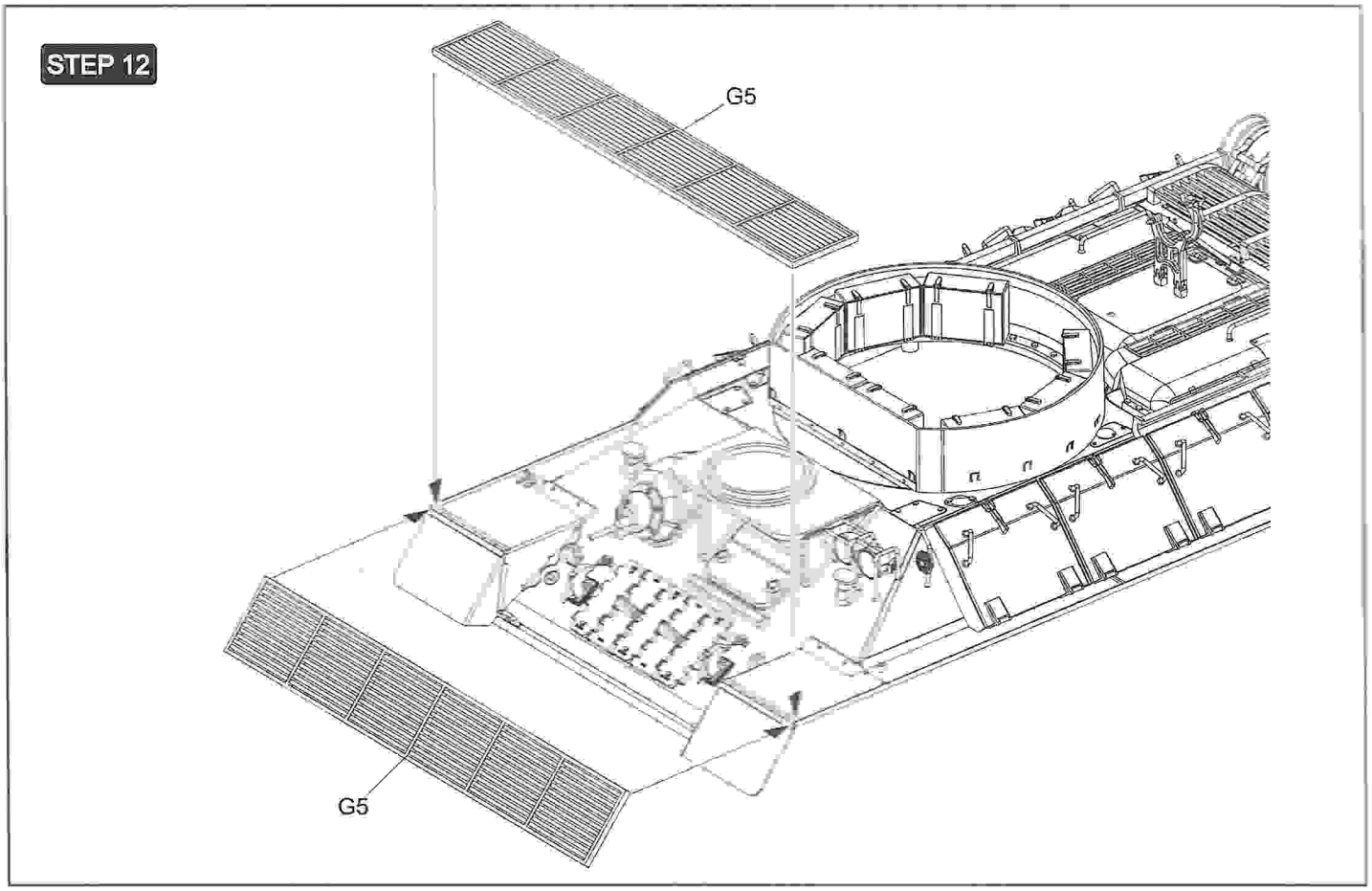

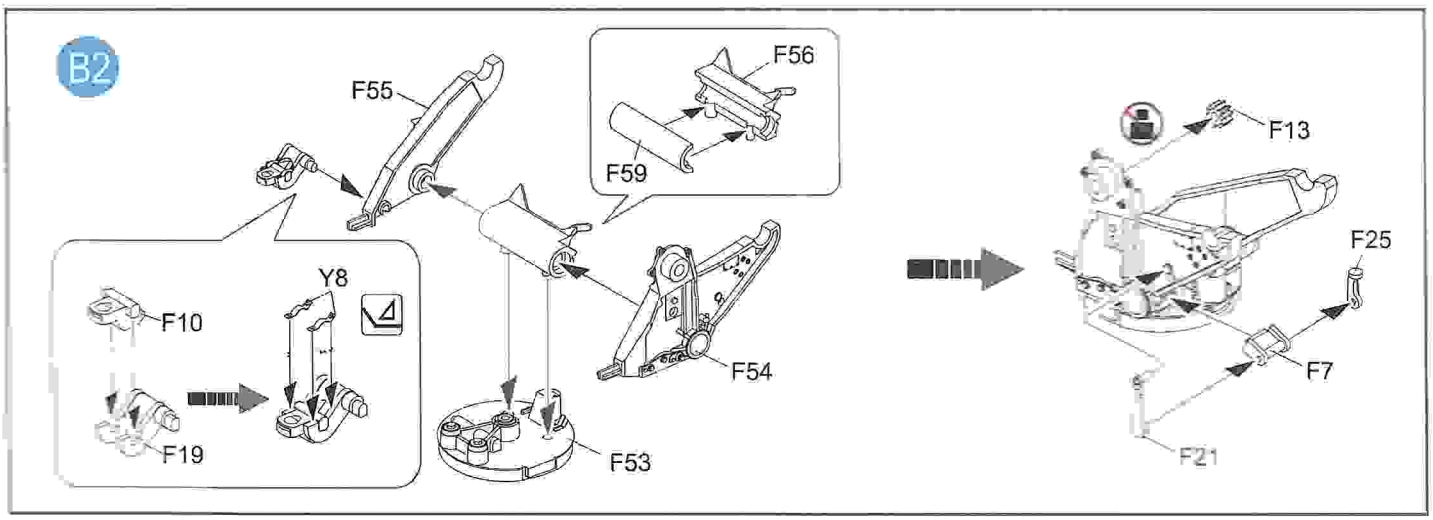

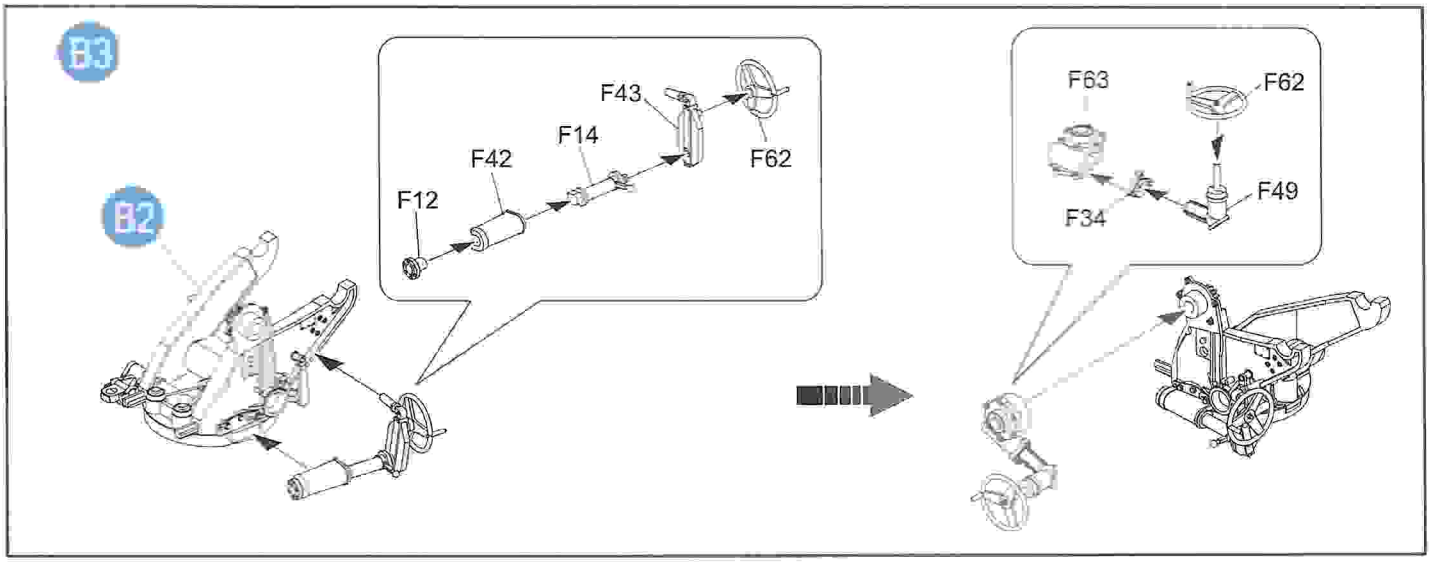

©2019 RYEFIELD MODEL

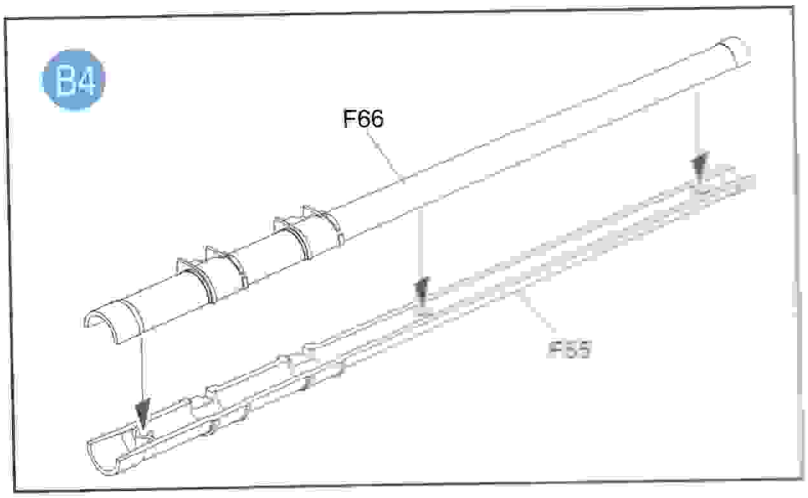

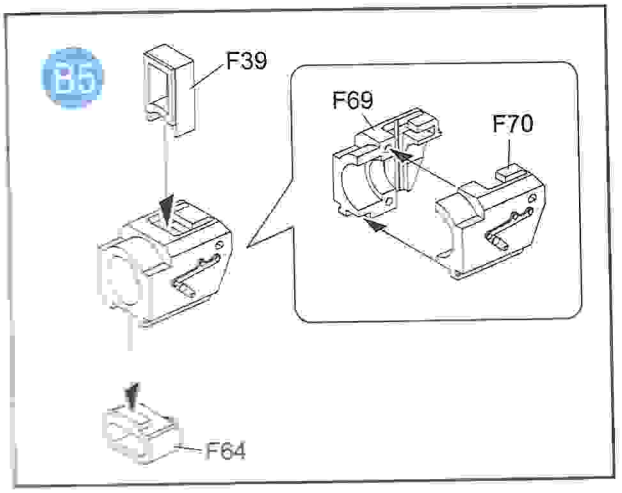

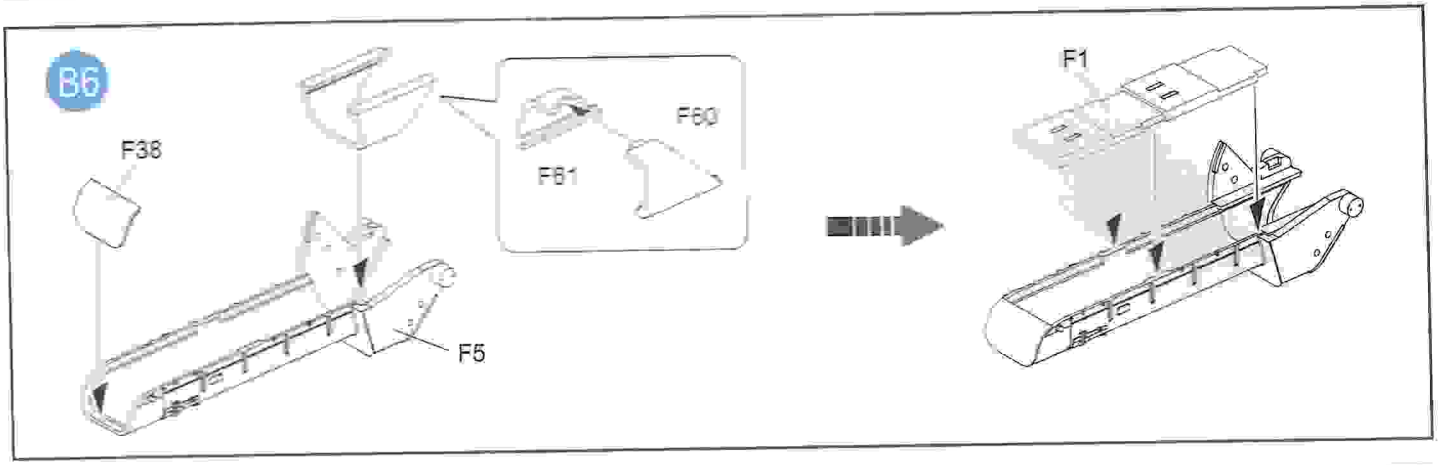

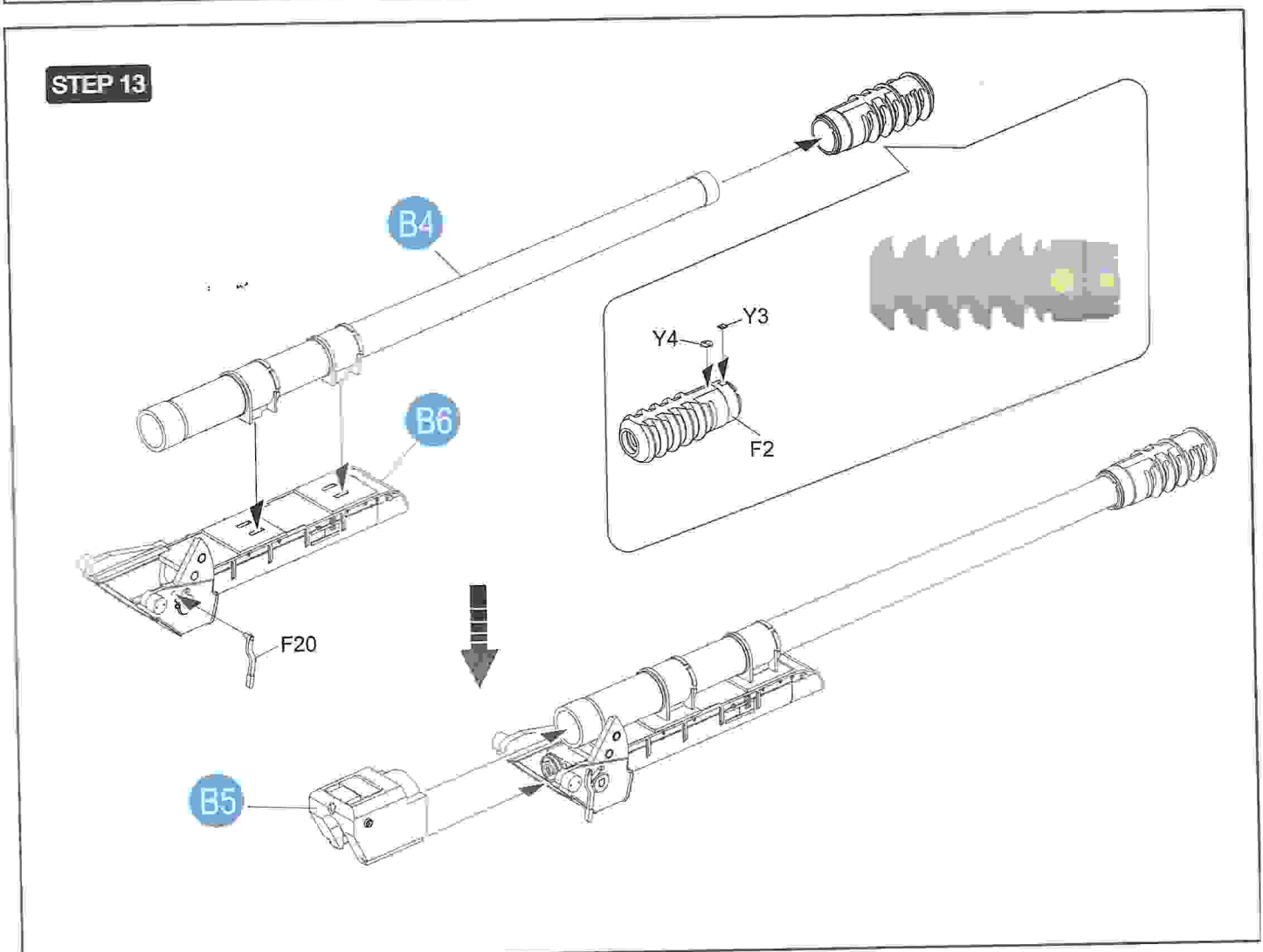

©2019 RYEFIELD MODEL

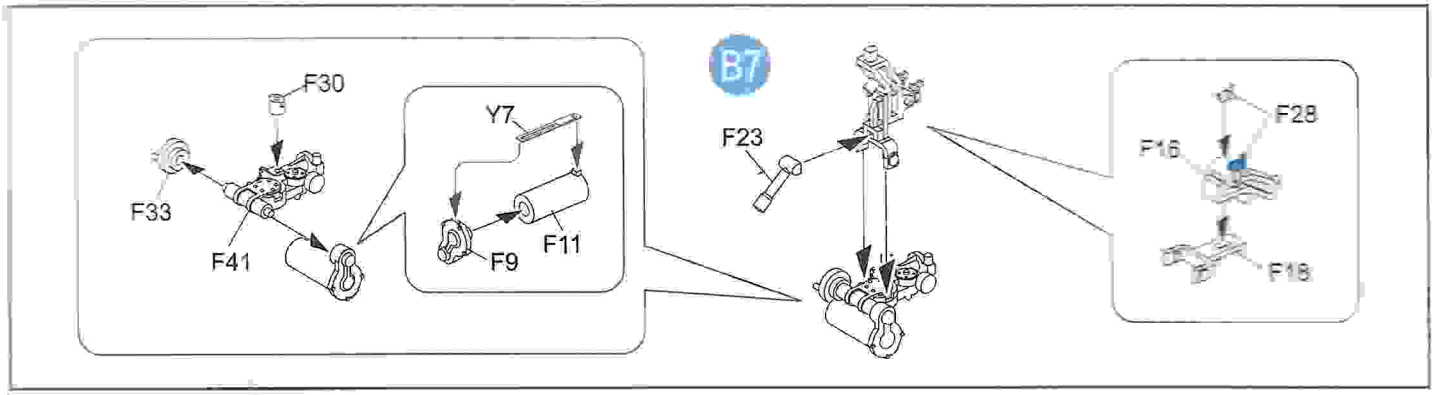

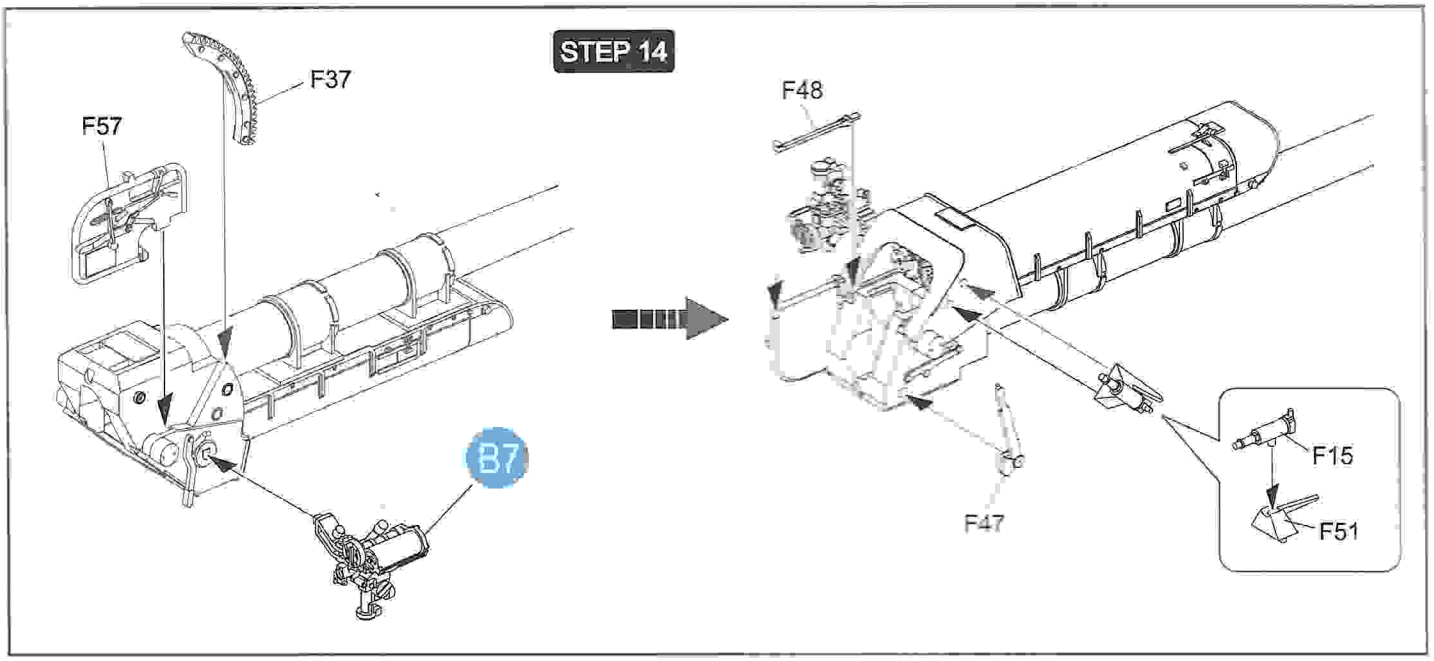

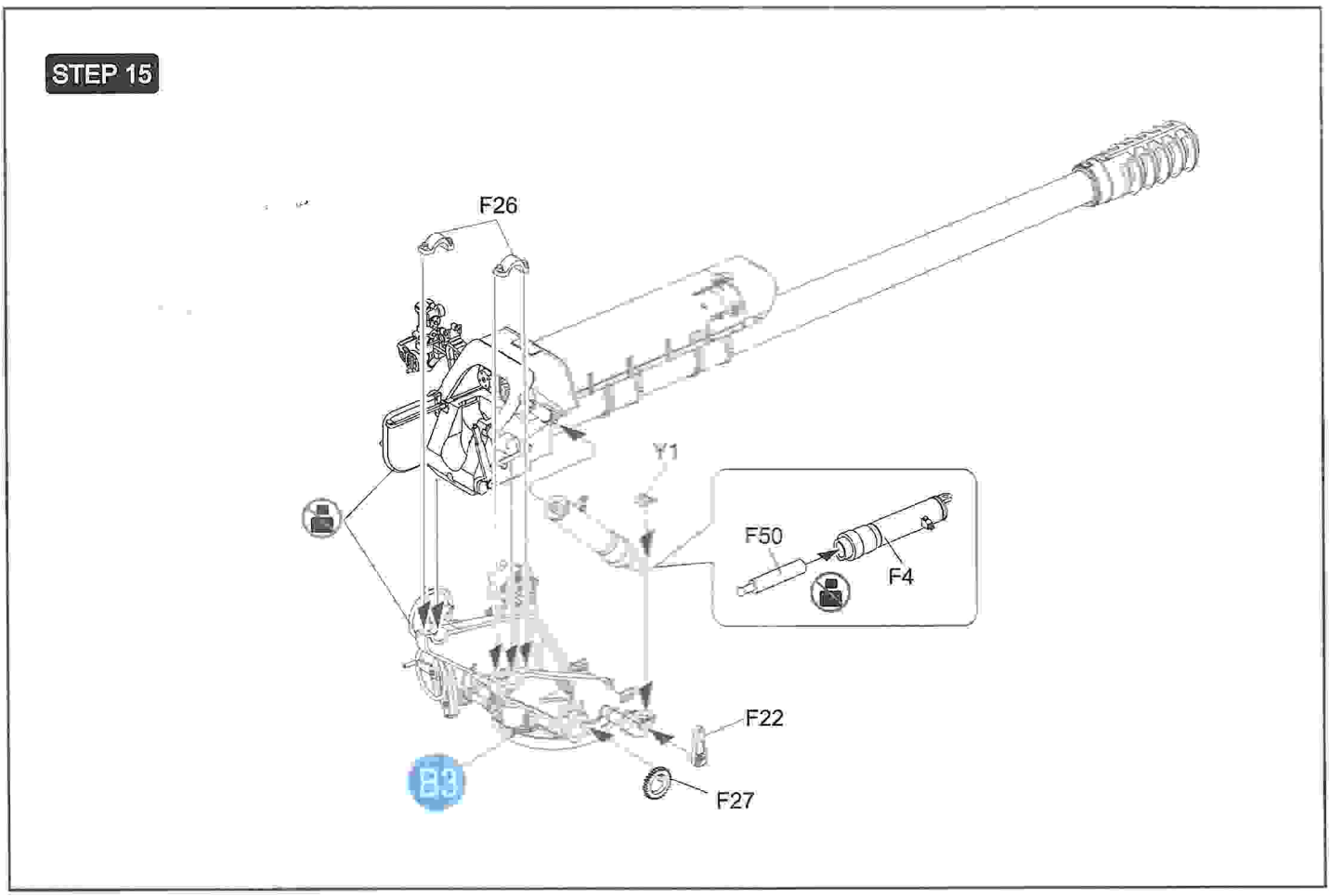

©2019 RYEFIELD MODEL

STEP 16

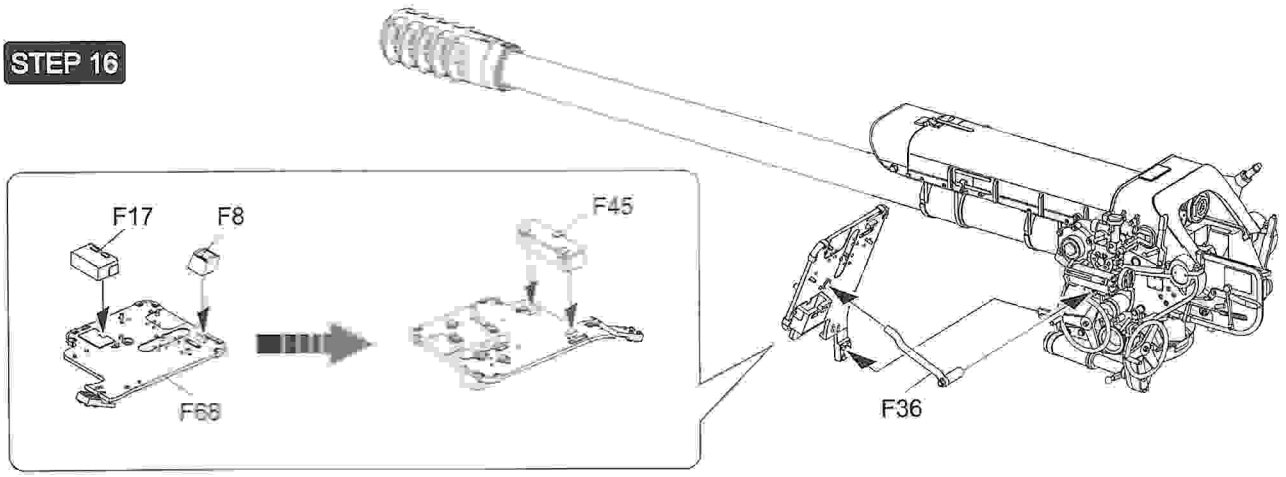

STEP 17

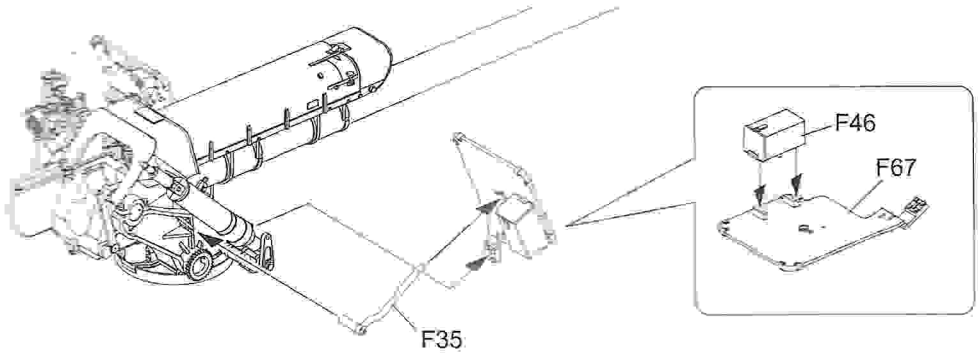

STEP 18

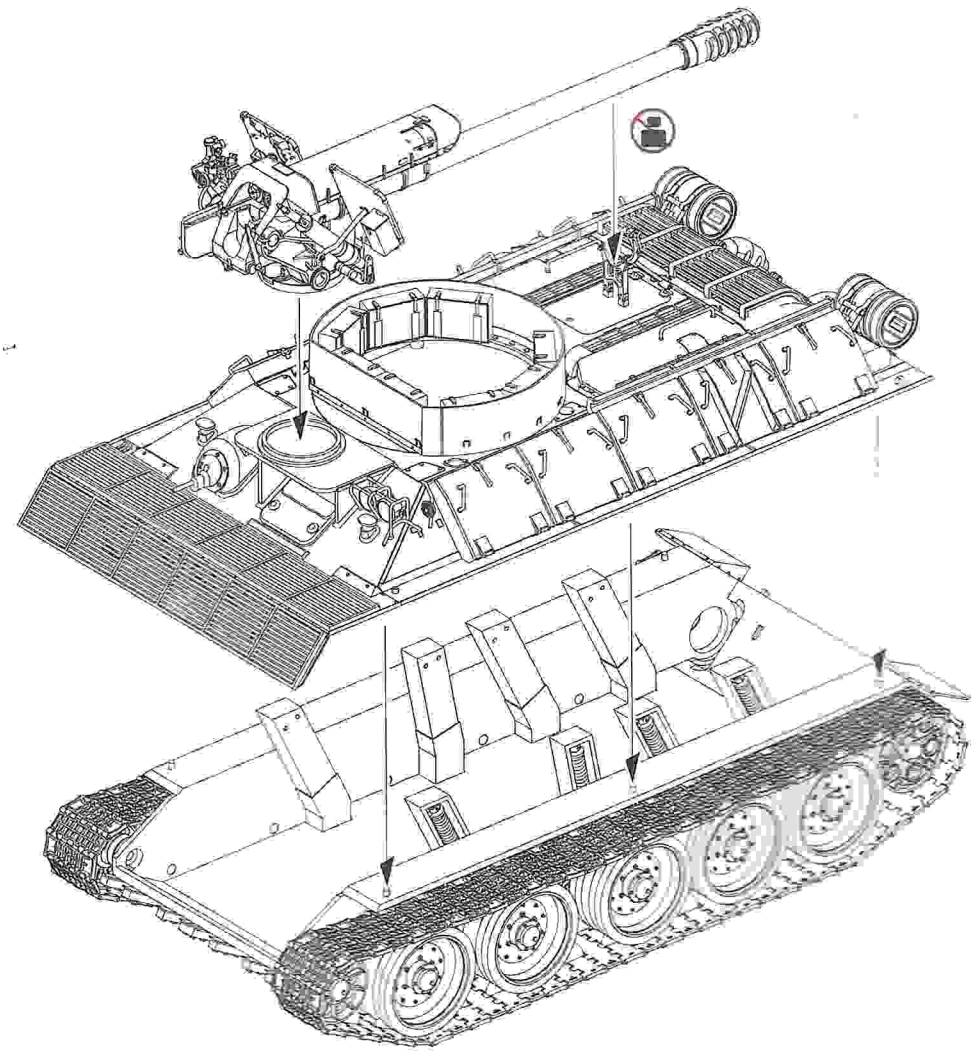

RFM
RYEFIELD MODEL
www.migjimenez.com

T-34/ D30 122MM

SYRIAN SELF-PROPELLED HOWITZER

Painting and Marking Guide

A.MIG-0030 Brunn Yellow	A.MIG-0033 Rubble & Tires	A.MIG-0035 [illegible]
A.MIG-0042 Ora Rust	A.MIG-0045 Gun Metal	A.MIG-0095 [illegible]
A.MIG-0094 Crystal Gloss 50% A.MIG-0195 Silver 50%		

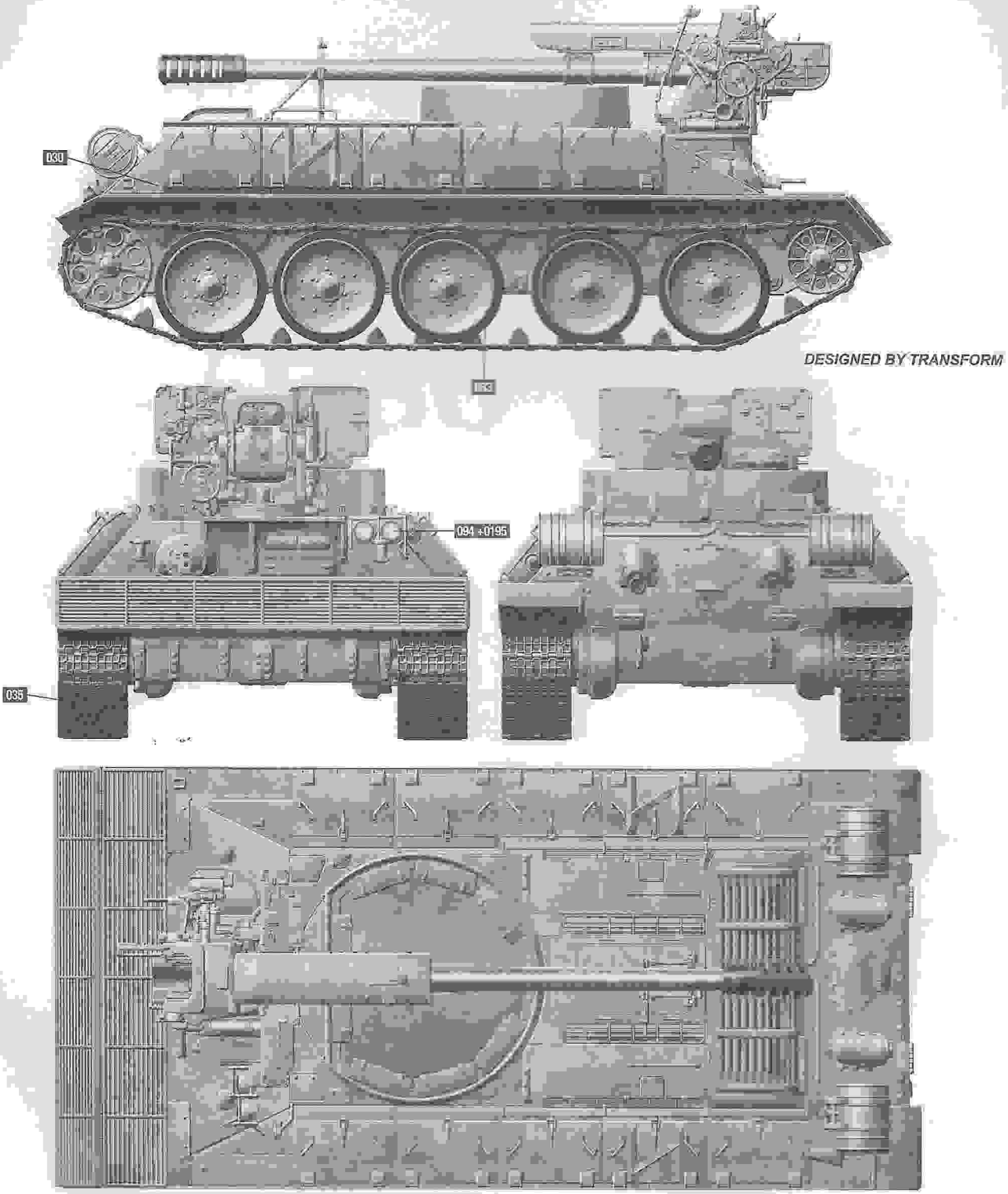

WEATHERING STEPS WITH AMMO PRODUCTS

1 GENERAL WASH
A.MIG-1007 US Modern Vehicles Wash

2 FILTER
A.MIG-1503 Ochre For Light Sand

3 STREAKING
A.MIG-1255 Streakingbrusher Grime

5 TRACK WASH
A.MIG-1002 Tracks Wash

5 DUST
A.MIG-3025 Syrian Ground
A.MIG-3018 Middle East Dust
A.MIG-3012 Sand

6 RUST
A.MIG-1254 Streakingbrusher Rust

7 GREASE & OIL
A.MIG-1408 Fresh Engine Oil

RFM
REAL FIELD MODEL ®
www.migjimenez.com

T-34/ D30 122MM

SYRIAN SELF-PROPELLED HOWITZER

Painting and Weathering Guide

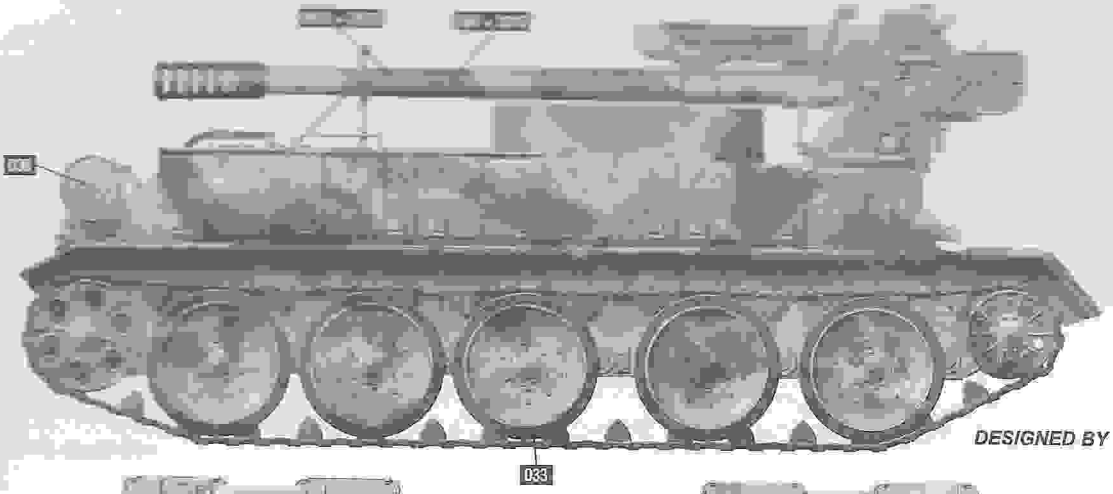

DESIGNED BY TRANSFORM

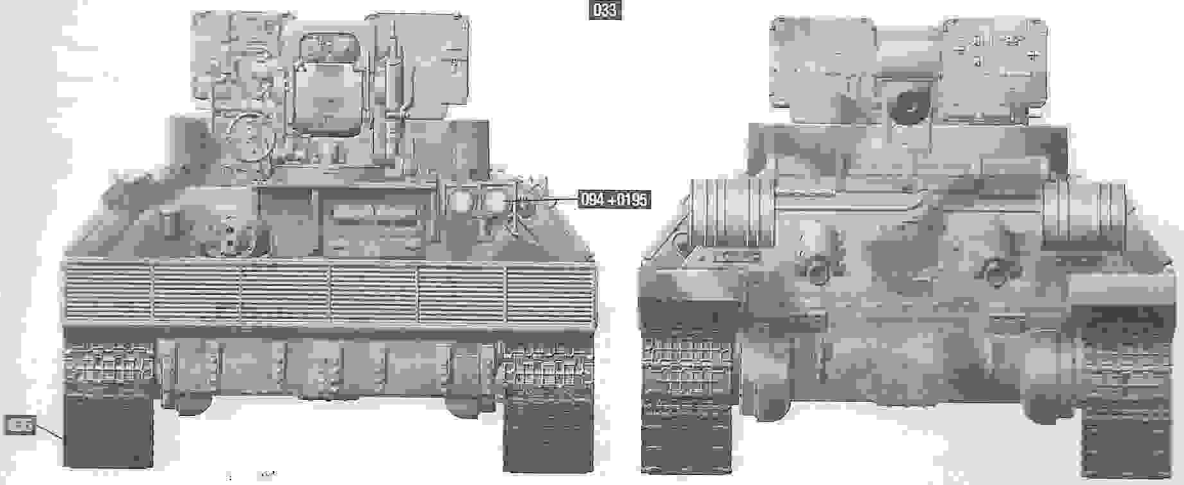

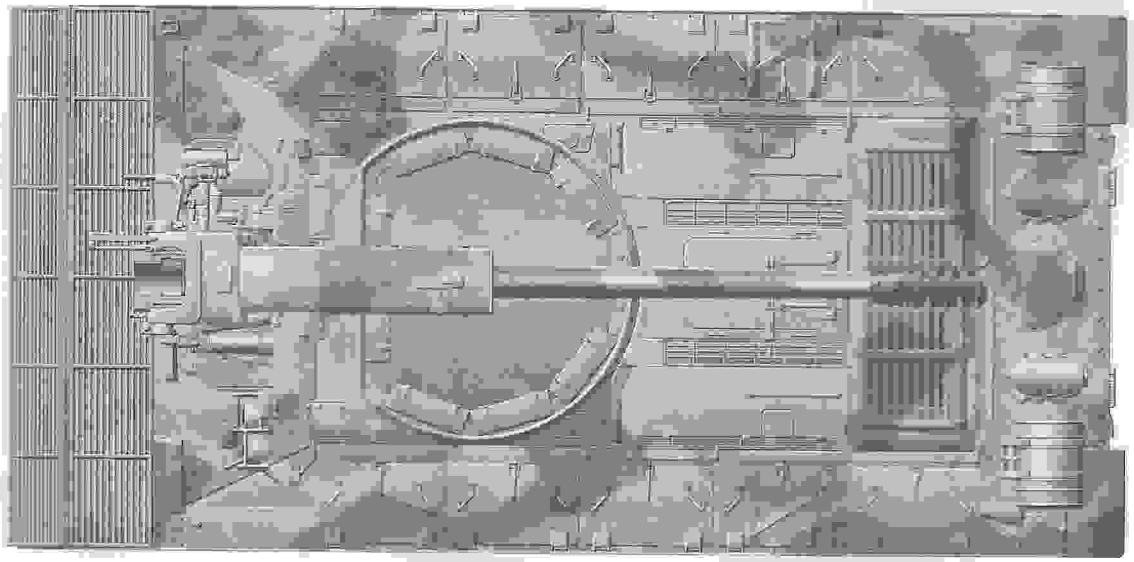

WEATHERING STEPS WITH AMMO PRODUCTS

1 GENERAL WASH
A.MIG-1007 US Modern Vehicles Wash

2 FILTER
A.MIG-1503 Ochre For Light Sand

3 STREAKING
A.MIG-1255 Streakingbrusher Grime

5 TRACK WASH
A.MIG-1002 Tracks Wash

5 DUST
A.MIG-3025 Syrian Ground
A.MIG-3018 Middle East Dust
A.MIG-3012 Sand

6 RUST
A.MIG-1254 Streakingbrusher Rust

7 GREASE & OIL
A.MIG-1408 Fresh Engine Oil